CITY OF DEER PARK
JANUARY 28, 2019 - 5:30 PM
DEER PARK COMMUNITY DEVELOPMENT CORPORATION MEETING - FINAL

COUNCIL CHAMBERS
710 E SAN AUGUSTINE
DEER PARK, TX 77536

T. J. Haight, President, Position 2
Georgette Ford, Vice President, Position 7
Sue Mauk, Secretary, Position 1
Jeff Lawther, Treasurer, Position 4

Les Ellard, Position 3
Doug Burgess, Position 5
Laura Hicks, Position 6

CALL TO ORDER

1. Approval of minutes of joint workshop meeting held on September 24, 2018. MIN 19-024

Recommended Action: Approval

Attachments: CDC_MW_092418.JOINT CC PARC

2. Approval of minutes of regular meeting held on October 22, 2018. MIN 19-023

Recommended Action: Approval

Attachments: CDC_MR_102218

3. Approval of minutes of special meeting held on January 7, 2019 MIN 19-022

Recommended Action: Approval

Attachments: CDC_MS_010719

4. Discussion and possible recommendation to City Council on entering into an agreement with Burditt Consultants, LLC for professional services for the development of the Type B Hike and Bike Trails. AGR 19-002

Recommended Action: Recommend to City Council to enter into an agreement with Burditt Consultants, LLC for professional services for the development of the Type B Hike and Bike Trails

Department: Public Works

Attachments: Deer Park_Hike and Bike Trails Agreement 1-21-19

The Mission of the City of Deer Park is to deliver exemplary municipal services that provide the community a high quality of life consistent with our history, culture and unique character.

5. Discussion and possible recommendation to City Council to purchase a double face, internally illuminated monument sign for the Maxwell Adult Center. PUR 19-002

Recommended Action: Recommend to City Council to purchase a double face, internally illuminated monument sign for the Maxwell Adult Center.

Attachments: NS18 30315A Deer park Maxwell Ault Ctr- 1201 Center Street. - Deer park, TX

Business Agreement - Deer Park Maxwell Adult Center - Option 1 - 12.19.2018

6. Discussion of issues relating to the current status of DPCDC projects. RPT 19-007

Recommended Action: Receive the report.

Attachments: Deer Park CDC Project Update - 1-28-19

7. Consideration of and possible action on the quarterly report for the period of October 1, 2018 - December 31, 2018. RPT 19-008

Recommended Action: Approve the quarterly report for the period of October 1, 2018 - December 31, 2018 and authorize submission to the City Council.

Department: City Manager's Office

Attachments: CDC Quarterly Report 2018

8. Consideration of and possible action on the DPCDC's annual report to the State Comptroller for Fiscal Year 2018. RPT 19-009

Recommended Action: Approve annual report to the State Comptroller for Fiscal Year 2018.

Department: City Manager's Office, Finance and Parks & Recreation

Attachments: Annual 4B_EDC Report to Texas Comptroller

9. Announcement of date and time of the next DPCDC regular board meeting: April 22, 2019 at 5:30 pm. DIS 19-011

Recommended Action: Acknowledge the date and time of the next DPCDC regular board meeting.

ADJOURN

_____

Shannon Bennett, TRMC
City Secretary

Posted on Bulletin Board
January 23, 2019

City Hall is wheelchair accessible and accessible parking spaces are available. Hearing assistance devices are available. Requests for accomodations services must be made 72 hours prior to any meeting. Please contact the City Secretary's office at 281-478-7248 for further information.

The Mission of the City of Deer Park is to deliver exemplary municipal services that provide the community a high quality of life consistent with our history, culture and unique character.

City of Deer Park

710 E SAN AUGUSTINE
DEER PARK, TX 77536

Legislation Details (With Text)

File #:	MIN 19-024	**Version:**	1	**Name:**	
Type:	Minutes			**Status:**	Agenda Ready
File created:	1/22/2019			**In control:**	Deer Park Community Development Corporation
On agenda:	1/28/2019			**Final action:**	
Title:	Approval of minutes of joint workshop meeting held on September 24, 2018.				
Sponsors:					
Indexes:					
Code sections:					
Attachments:	CDC_MW_092418.JOINT CC PARC				

Date	Ver.	Action By	Action	Result
1/28/2019	1	Deer Park Community Development Corporation		

Approval of minutes of joint workshop meeting held on September 24, 2018.

Summary:

Fiscal/Budgetary Impact:

Approval

powered by Legistar™

CITY OF DEER PARK

CC 77-173
CDC 1-180

710 EAST SAN AUGUSTINE STREET

DEER PARK, TEXAS 77536

Minutes

of

A JOINT WORKSHOP MEETING OF THE CITY COUNCIL OF THE CITY OF DEER PARK, TEXAS, THE DEER PARK COMMUNITY DEVELOPMENT CORPORATION AND PARKS AND RECREATION COMMISSION HELD AT CITY HALL 710 EAST SAN AUGUSTINE STREET, DEER PARK, TEXAS ON SEPTEMBER 24, 2018 BEGINNING AT 5:30 P.M., WITH THE FOLLOWING MEMBERS PRESENT:

JERRY MOUTON	MAYOR
SHERRY GARRISON	COUNCILWOMAN
THANE HARRISON	COUNCILMAN
TOMMY GINN	COUNCILMAN
BILL PATTERSON	COUNCILMAN
RON MARTIN	COUNCILMAN
RAE A. SINOR	COUNCILWOMAN

MEMBERS OF DEER PARK COMMUNITY DEVELOPMENT CORPORATION PRESENT:

T. J. HAIGHT	PRESIDENT
GEORGETTE FORD	VICE PRESIDENT
SUE MAUK	SECRETARY
DOUG BURGESS	MEMBER
JEFF LAWTHER	MEMBER

MEMBERS OF THE PARKS AND RECREATION COMMISSION PRESENT:

GEORGETTE FORD	CHAIRMAN
JO KIEFER	VICE CHAIRMAN
SHERRY REDWINE	MEMBER
ERIC RIPLEY	MEMBER

OTHER CITY OFFICIALS PRESENT:

JAMES STOKES	CITY MANAGER
GARY JACKSON	ASSISTANT CITY MANAGER
SHANNON BENNETT	CITY SECRETARY
CHARLIE SANDBERG	PARKS & RECREATION DIRECTOR

1. MEETING CALLED TO ORDER – Mayor Mouton opened the meeting on behalf of the City Council, President T. J. Haight opened on behalf of the Deer Park Community Development Corporation and Vice Chairman, Jo Kiefer, opened on behalf of the Parks and Recreation Commission at 5:30 p.m.

2. THE DEER PARK CITY COUNCIL, THE DEER PARK COMMUNITY DEVELOPMENT CORPORATION AND THE DEER PARK PARKS AND RECREATION COMMISSION WILL DISCUSS ISSUES RELATING TO THE DEER PARK COMMUNITY CENTER – Steven Springs of Brinkley, Sargent, Wiginton Architects began the meeting with a review of the past presentation of the site assessment that was done. Some of the key site observations were of the drainage, shared parking and the multiple entrances. The square footage was incorrect for the gymnasium and has been corrected to show it to be 12,000 square feet. The proposition of the Type B Sales Tax project for the renovation and expansion of the Community Center and Gym does include an indoor pool, but will need to be discussed to clarify a definite design. The scope and scale of the existing building does present some challenges from a physical standpoint and also from a program function standpoint. The next step is to discuss a decision to whether to renovate or reconstruct.

Parks and Recreation Director, Charlie Sandberg gave an overview of the prior discussion of the expansion of the Community Center, there some ideas of the gym and pool. The total investment budget in 2012, was estimated to be 2.1 to 3 million dollars.

Mr. Sandberg commented, “We wanted that to be a real good starting point so you can see the transition from that point to where we are leading to.”

Assistant City Manager, Gary Jackson commented, “That is a good point Charlie made. There was no definition to what that was going to entail, there was no programming that went into that number. That was the overall citywide Parks Master Plan that was the project expansion of the Community Center. That plan didn’t give much detail.”

Mr. Springs continued the discussion with the framed benchmark information of estimated construction costs based on 2018 dollars. These numbers are not the total budget costs. It is only a basic range cost. The purpose of the numbers is meant to provide information to help guide and direct the project. The two options presented are renovation or new construction. Renovation for a 36,300 square foot building with an additional component of possible entrances, to include some room for abatement costs due to the age of the building, estimates between the low range of 8.2 million to a high range of 9.7 million. The second option is to construct a new building. New construction of a building with the same square footage, estimates to be of similar construction cost. What may drive the decision from this point forward, may not necessarily be capital cost. It could be other issues of usage and the long term vision of the project.

Mr. Springs discussed with the pool and gave different scenarios of the usage for the pool. The options included a therapy pool, enclosed lap pool or enclosing the existing pool. Mr. Springs commented, "There is a wide range of what an indoor pool could be, and we wanted to give you all a frame look at what you can and cannot do with a pool. There is a needs assessment process that would need to be followed that would lend a lot more detail for this project."

Mayor Mouton commented, "If we are committing in doing this, it seems like the most important thing to me, is finding the firm that we would need to hire to start the conceptual engineering designs, whether it be a renovation or new construction. I felt it was best to try to have this secondary meeting to come to some kind of agreement of which direction we want to go from here."

Councilwoman Sinor asked, "I am shocked at the numbers. How did we get so far off when we started assigning numbers from the beginning? Is there 6 million dollars to complete all the renovations and the pool?"

Parks and Recreation Director, Charlie Sandberg responded, "Yes. The pool is additional."

Councilman Harrison asked, "A new or renovated Community Center is a little over 9 and 10 million dollars not including the pool? If you add the pool to that, are we looking at 15 to 16 million dollars total?"

Mr. Sandberg responded, "That is correct."

Mayor Mouton asked, "Was there any conversation when we were discussing Type B Projects, of renovating or replacing the Community Center?"

Councilwoman Sinor responded, "Not replacing. It was all renovation, but I do not think anyone knew how bad of shape the building was in."

Councilwoman Garrison asked, "What can we legally do in dealing with the Type B Project? Wouldn't we have to set priorities?"

Mayor Mouton commented, "Based on the bond ballot, we have some minor precedent on how the allocation of the 6 million dollars that was originally funded to City Hall was able to be used."

Assistant City Manager, Gary Jackson commented, "First, the ballot did not speak of a dollar amount. It defined the projects. For this project, renovations and expansion of the Community Center and Gym to include an indoor pool were the parameters given to this project. The Council passed a resolution which put in a dollar amount. You have to look at

the dollar amounts in combination with the ballot amounts. There was in effect, a contract with the voters. In speaking with the same Bond Counsel we had for the new City Hall, even though the City Hall was not a Type B Project, there were bond funds that were left and the majority of that money was City fund balance that we built. We went to the Bond Counsel and let them know there was mold, asbestos and other issues and that it was not feasible to go through all that and practically rebuild the existing footprint and spend almost as much as you are spending on the new building right next door. That was the purpose of that bond issue to move next door and build a new one in lieu of the expansion of the existing one. That question was posed to the Bond Counsel. Mr. Frels felt as long as we stayed within the Dow Park footprint, doing the same similar type thing of not expanding the building because in effect, you are still spending as much when you look at the cost comparison. The pool is still an important factor, and was advertised as included in the contract with the voters."

Councilman Ginn commented, "I know that pool was a major selling point of the election. I think there will be a lot of unhappy voters if we put that on the back burner."

Councilwoman Garrison commented, "It doesn't say what kind of indoor pool. I think some people got their heads wrapped around some kind of a really big indoor pool like they have in La Porte. There was never any promise of that. I don't see how anyone can possibly believe we can spend 15 million dollars to build a new building with a pool. My concern is what happens to the 6 million dollars if we don't. I know we can use the 6 million dollars to rebuild or renovate, but anything else that we go over, will have to come out of our reserve."

Mayor Mouton commented, "We have borrowing capacity of going up to 50 plus million based on the last presentation from our Bond Counsel. We have the space to allocate and cover the expense without effecting the tax rate. There is a feasible way to do it without effecting short or long term scenarios with our rating or borrowing capacity. I am not advocating that we have to do that."

Councilwoman Sinor commented, "I agree with you Mayor. We are just talking about hypothetical numbers. We have to get to a point where we start talking about real numbers."

Mayor Mouton commented, "I struggled in the concept in the last meeting of putting a committee together. We have to objectively move forward in hiring somebody to define scopes to enable us to define a budget. Then we can work this whole idea of what is in front of us. In some context, I think the 6 million dollars needs to be preserved to the extent of what was on that ballot. Anything over and beyond that, I think, we should look at different ways the City can propose a secondary Type B ballot proposition. Any way you look at it, the City is in great financial shape to approach this without putting us in any dire straits. If everyone is in some aspect of agreement, we just need to consider putting out a request for proposal and try to find a firm. Then we can start working with a conceptual scope which will then define cost at that point."

Councilman Patterson commented, "I am concerned about the numbers and how we got here. We do have an opportunity to set the future course in Deer Park in the area of Parks and Recreation. I hope we do not lose sight of that and get caught up. I want us to remember we are leaving a footprint for the future."

Councilman Harrison asked, "If we were to build a new Community Center, what would happen to the existing facility?"

Mr. Springs responded, "We didn't try to define that yet at this point. It depends on the scope. We can't answer your question directly because there are many options."

Councilman Harrison asked, "Did any of the numbers you presented include demolishing the existing Community Center?"

Mr. Springs responded, "Yes, in Option 2."

Councilman Harrison asked, "Did those numbers include parking and lighting for the new Community Center?"

Mr. Springs responded, "Yes. It was all in from a brick and mortar standpoint. It would not have included soft costs."

Councilman Harrison asked, "Is there any part of the existing Community Center where we could keep the structure, the sides and roof and also put a pool in?"

Mr. Springs responded, "No, not really. The only thing that would be feasible would be the gym. That is the only healthy structure. The existing building is full of structural and internal problems. It wouldn't be feasible to put a pool inside the existing structure."

Councilman Harrison commented, "You could put a pool in the gym at the Community Center in that one building."

Mr. Springs responded, "It is technically feasible. In my intuition, you would spend that much to make that work."

Councilman Harrison asked, "The number you gave to build a new facility, does that include a gym or keeping the existing gym?"

Mr. Springs responded, "Keeping the existing one. Conceptually, we were taking the 24,000 square foot footprint of the existing Community Center and just moving it to another place in the park."

Councilwoman Garrison asked, "Can you tell me again what is the square footage of just the Community Center?"

Mr. Springs responded, "24,000 square feet."

Councilwoman Garrison asked, "We still do not know, at this point, if we will need 24,000 square feet?"

Mr. Springs responded, "Correct."

Councilwoman Garrison commented, "If I remember correctly, from a presentation before, one of the gentlemen talked about how unstable the ground is and that he recommended not putting in an inground pool."

Councilman Harrison asked, "The dilemma is, do we move the Community Center and keep the gym or totally renovate and possibly have to add on and not have a pool?"

Mayor Mouton commented, "The aspect of renovating that building is the same conceptual problems we had with City Hall, where you cannot shut that building down to renovate it and expect not to disrupt programming substantially of an extended amount of time. That is not an option. We can leave the building and maintain it as it is, or we can build a new one to replace it while we leave the existing building there."

Mr. Springs commented, "We didn't really have a way to put a cost to that disruption. You would have to temporarily house those programs in a different location or shut them down."

Councilman Harrison asked, "In the Type B that was passed, it mentioned a pool. If we were to build a new community center in Deer Park and keep the gym and demolish everything around it, can we approach a pool at a later date? If we build a new community center, do we have to have a pool because of the way it is worded?"

Mayor Mouton commented, "We have so many directions we can go in. We can't do everything with the 6 million dollars. Once we start defining the scopes, we will have multiple scopes of direction. The pool being one, the community center being another and based on what we do with the community center, the last scenario being the gym and how we can make all that work."

Councilwoman Garrison asked, "Are you estimating the cost for a new Community Center with the drainage included?"

Mr. Springs responded, "Yes. We didn't line item a whole list of things. We just used a square foot cost and provided that range for that very reason. I provided a low and a high range because we really don't know what the site development costs are."

Mayor Mouton asked, "In the general scope, is it safe to say yes, the drainage would have to be accommodated?"

Mr. Springs responded, "Correct. Unless there is something unusual going on that we don't know about, typical site development costs are included in the numbers."

Councilman Harrison commented, "I am in agreement with Councilman Patterson."

Councilwoman Garrison commented, "I agree too. I think this is our future. I think we should build something we are proud of, this is our future. We just have to bite the bullet and move forward."

Councilman Martin asked, "Is the next logical step putting RFP's out to get real numbers?"

Councilwoman Garrison asked, "Don't we need to know how many square feet we are really needing if we build a new community center?"

Mayor Mouton responded, "I would say the next step is to hire someone to design the perimeter, and to come up with what our needs are now and for the next 50 years with what is recommended from Staff."

Mr. Springs commented, "What you are talking about is what we call a needs assessment process. You have the opportunity of success because you can go into the project with your eyes open and having built consensus about what is going into the job and knowing the numbers are valid."

Mr. Sandberg commented, "What you see currently being programmed in the Community Center, I am not advocating for or against it. The current programs may not be there anymore. That may change in the future."

City Manager, Jay Stokes, commented, "In terms of hiring a firm, we are already under contract with Halff and we have Mr. Springs through that relationship with them. That step is already established."

Mr. Springs commented, "We have some money left in the existing contract, via Halff with the City."

Mayor Mouton asked, "Are you more on the engineering side or architectural side?"

Mr. Springs responded, "I am the architect. I would say that the money is still encumbered in Halff's contract that is, our money. It is not enough to cover a full needs assessment, but there is some money there to get started."

Mayor Mouton commented, "I am up for exploring and expanding perimeters moving forward with a defined scope. I would accept recommendations from you in regards to where we are."

Mr. Stokes commented, "I would like to keep working with Mr. Springs. It will save time from having to start all over."

Mayor Mouton asked, "I just want to make sure Council, the Community Development Corporation and the Parks and Recreation Commission is good with that moving forward?"

Mr. Jackson asked, "In looking at the prospective scope, are we looking at renovation?"

Mayor Mouton commented, "My personal opinion, based on the programming interruption, I do not think renovation is an option."

Mr. Stokes asked, "Now that we know that renovation is not an option, and that we will be creating something new, the question is, who is going to be involved in determining what we will be creating? We know we will be working with Mr. Springs, but do you want this to be Staff driven or do you want it to be a committee?"

Mayor Mouton responded, "I say multiple different committees and multiple different approaches. No matter where we go with this, it is going to end up right back here with Council and these two committees."

Mr. Stokes commented, "For the next few months, Staff will work with Mr. Springs to come up with conceptual ideas and bring them back to a called meeting."

Mr. Springs commented, "Typically when we are involved in a needs assessment like this, we usually are talking to a steering committee and then doing period reports to the larger bodies. I think a steering committee with 10-12 members. The questions I would have in order to formalize a proposal, is knowing how many public meetings we would have to have? Or is the committee structure provided so we do not have to have that many public meetings?"

Mr. Stokes asked, "This is what I see, a couple of basketball courts, some kind of therapy indoor pool, a walking track, a weight room with nice lockers. Is this something that we are looking at?"

Mr. Springs commented, "The component I didn't hear was the mention of the preschool."

Mr. Stokes commented, "To be clear, I do not see a preschool in the new building. This is becoming more clear, we will end up with a contract with Mr. Springs. Staff will work on all this and we can meet back in early 2019."

Mr. Springs commented, "I think the best interest is to come back at the first couple of milestones along in the process to make sure we are still between the digits that everybody wants to see. I would want our first big group meeting for a progress report before the holidays hit."

It is the consensus of the Council to streamline the process and to come back in future meetings for assessment reports and updates. If anything should come up, adjustments can be made as the conceptual ideas progress.

2. THE DEER PARK CITY COUNCIL, THE DEER PARK COMMUNITY DEVELOPMENT CORPORATION AND THE DEER PARK PARKS AND RECREATION COMMISSION WILL DISCUSS ISSUES RELATING TO THE APPOINTMENT OF A COMMITTEE TO REVIEW OPTIONS FOR THE DEER PARK COMMUNITY CENTER – Discussion was covered with the previous item and will be determined in a future meeting to appoint a committee.

3. THE DEER PARK CITY COUNCIL, THE DEER PARK COMMUNITY DEVELOPMENT CORPORATION AND THE DEER PARK PARKS AND RECREATION COMMISSION WILL DISCUSS ADDITIONAL EXPENSES AND FUNDING FROM THE MAXWELL ADULT CENTER UNENCUMBERED BALANCE – Parks and Recreation Director, Charlie Sandberg, gave an overview of the Maxwell Adult Center renovations and the additional expenses. Mr. Sandberg explained how originally, some of the expenses were pulled out prior to construction of the project because of pricing. The expenses, now coming up, include structured cabling for internet and phone service, architectural services for project administration and additional days added due to issues related to the normal scope of work.

   Assistant City Manager, Gary Jackson commented, "I believe Charlie only has numbers on the first item of structured cabling and that will be an item for you to vote on in an upcoming agenda. I believe what Mr. Sandberg wanted to preface you on the expenses, in addition to what is on the agenda, because of the extra time it has taken. There is an extended number of days that the contractor will have to be paid due to general conditions. The number looks like it will be limited down between $11,000 to $15,000. That is less than it could have been. The time for approving that will not be until the contract is completed because the number of days are unknown until then. Based on the current completion date, it looks like it will be in the $15,000 range for the additional days. Mr. Springs' contract was based on the number of days originally set in the contract. Since it took more days, he has provided more architectural services. There is enough money within the unencumbered funds for the structural cabling as well."

4. THE DEER PARK COMMUNITY DEVELOPMENT CORPORATION WILL CONSIDER AND TAKE ACTION TO RECOMMEND TO CITY COUNCIL TO REQUEST FUNDING FROM THE MAXWELL ADULT CENTER UNENCUMBERED BUDGET – Parks and Recreation Director, Charlie Sandberg gave an overview of the fund amount it will take to cover project costs associated with structured cabling and network cabling for the internet and phone services. An estimate for the structured cabling is projected to be $17,680.37.

Motion was made by Georgette Ford and seconded by Doug Burgess to recommend to City Council to request funding of $17,680.37 from the Maxwell Adult Center unencumbered budget.

5. THE DEER PARK CITY COUNCIL WILL CONSIDER AND TAKE ACTION ON A RECOMMENDATION FROM THE DEER PARK COMMUNITY DEVELOPMENT CORPORATION TO AUTHORIZE FUNDING FROM THE MAXWELL ADULT CENTER UNENCUMBERED BUDGET – Motion was made by Councilwoman Garrison and seconded by Councilman Patterson to authorize funding from the Maxwell Adult Center unencumbered budget in the amount of $17,680.37. Motion carried 7 to 0.

6. ADJOURN – Mayor Mouton adjourned the workshop meeting on behalf of City Council, President Haight adjourned on behalf of the Deer Park Community Development Corporation and Vice Chairman Kiefer adjourned on behalf of the Parks and Recreation Commission at 6:42 p.m.

ATTEST:

_____
Shannon Bennett, TRMC
City Secretary

APPROVED:

_____
Jerry Mouton, Mayor
City Deer Park City Council

_____
T. J. Haight, President
Deer Park Community Development Corporation

_____
Jo Kiefer, Vice Chairman
Parks and Recreation Commission

City of Deer Park

710 E SAN AUGUSTINE
DEER PARK, TX 77536

Legislation Details (With Text)

File #:	MIN 19-023	**Version:**	1	**Name:**	
Type:	Minutes			**Status:**	Agenda Ready
File created:	1/22/2019			**In control:**	Deer Park Community Development Corporation
On agenda:	1/28/2019			**Final action:**	
Title:	Approval of minutes of regular meeting held on October 22, 2018.				
Sponsors:					
Indexes:					
Code sections:					
Attachments:	CDC_MR_102218				

Date	Ver.	Action By	Action	Result
1/28/2019	1	Deer Park Community Development Corporation		

Approval of minutes of regular meeting held on October 22, 2018.

Summary:

Fiscal/Budgetary Impact:

Approval

powered by Legistar™

CITY OF DEER PARK CDC 1-189

710 EAST SAN AUGUSTINE STREET

DEER PARK, TEXAS 77536

Minutes

of

THE REGULAR MEETING OF THE DEER PARK COMMUNITY DEVELOPMENT CORPORATION BOARD OF DIRECTORS HELD AT THE DEER PARK COUNCIL CHAMBERS, 710 EAST SAN AUGUSTINE STREET, DEER PARK, TEXAS, OCTOBER 22, 2018 AT 5:30 P.M., WITH THE FOLLOWING MEMBERS PRESENT:

T.J. HAIGHT	PRESIDENT
GEORGETTE FORD	VICE PRESIDENT
DOUG BURGESS	MEMBER
JEFF LAWTHER	MEMBER
LAURA HICKS	MEMBER
SHANNON BENNETT	BOARD SECRETARY
DONNA TODD	TREASURER

OTHER OFFICIALS PRESENT:

GARY JACKSON	ASSISTANT CITY MANAGER

1. MEETING CALLED TO ORDER – President T.J. Haight called the meeting to order at 5:30 p.m.

2. ANNOUNCEMENT OF APPOINTMENTS TO THE BOARD OF DIRECTORS – President, T.J. Haight, reported that as of October 16, 2018, the Deer Park City Council re-appointed T.J. Haight to Position 2, and Jeff Lawther to Position 4. In addition, Laura Hicks was appointed to Position 6.

3. APPROVAL OF MINUTES OF REGULAR MEETING ON JULY 23, 2018 – Motion was made by Georgette Ford and seconded by Doug Burgess to approve the minutes of the regular meeting on July 23, 2018. Motion carried unanimously.

4. APPROVAL OF MINUTES OF JOINT MEETING ON JULY 23, 2018 – Motion was made by Doug Burgess and seconded by Georgette Ford to approve the minutes of the joint meeting on July 23, 2018. Motion carried unanimously.

5. CONSIDERATION OF AND ACTION ON THE ANNUAL REVIEW AND AN ORDER TO ADOPT THE INVESTMENT POLICY FOR THE DEER PARK COMMUNITY DEVELOPMENT CORPORATION – Treasurer, Donna Todd discussed the annual review of the investment policy. The Corporation has elected to comply with the Act and has established a policy comparable to the investment policy of the City. The City has recently updated and adopted its investment policy in accordance with the Act making several minor changes, including further clarification of the 2017 legislative changes incorporated in the last update. These changes have been incorporated in the Corporation's investment policy and are summarized on the attached Deer Park Community Development Corporation Investment Policy Review. (Exhibit A1)

   Motion was made by Georgette Ford and seconded by Jeff Lawther to adopt the investment policy for the Deer Park Community Development Corporation. Motion carried unanimously.

6. DISCUSSION OF ISSUES RELATING TO THE CURRENT STATUS OF DEER PARK COMMUNITY DEVELOPMENT CORPORATION PROJECTS – Parks and Recreation Director, Charlie Sandberg gave a detailed update on the DPCDC projects that included Dow Park Pavilion, Maxwell Adult Center, Girls Softball Complex, Soccer Complex, Community Center, Hike and Bike Trails and the Spencerview Athletic Complex. (Exhibit B1-B2)

   Assistant City Manager, Gary Jackson commented, "There was just a lot of detailed information that we found out about the Community Center building. It has some very serious structural problems that you all have heard in detail. We have a path forward, that will be presented in the future."

   Mr. Sandberg responded, "I apologize that there is not any more information on the building."

7. DISCUSSION OF ISSUES RELATING TO ADDITIONAL EXPENSES AND FUNDING FROM THE MAXWELL ADULT CENTER UNENCUMBERED BALANCE – Parks and Recreation Director, Charlie Sandberg gave an overview of the additional expenses and funding for the Maxwell Adult Center. During the renovations, additional costs have occurred that have impacted the project's budget. Moving forward with using the unencumbered funds for the expenses of the purchase of the security camera equipment for the Maxwell Center to include installation and the additional cost for the extended architectural fees is being proposed.

8. CONSIDERATION OF AND POSSIBLE ACTION ON THE QUARTERLY REPORT FOR THE PERIOD OF JULY 1, 2018 – SEPTEMBER 30, 2018 – Motion was made by Georgette Ford and seconded by Laura Hicks to approve the quarterly report for the period of July 1, 2018 – September 30, 2018. (Exhibit C1-C5)

   Assistant City Manager Gary Jackson commented, "This gives you a highlight of all the meetings and activities as well as the financial report combined. The report is cumulative for the 2017-2018 fiscal year."

Motion carried unanimously.

9. CONSIDERATION OF AND ACTION ON AUTHORIZATION AND RECOMMENDATION TO CITY COUNCIL FOR AN AMENDMENT TO UTILIZE THE EXISTING UNENCUMBERED FUNDS FROM THE MAXWELL ADULT CENTER PROJECT FOR THE PURCHASE AND INSTALLATION OF SECURITY CAMERA EQUIPMENT FROM LENSEC STRUCTURED CABLING TO CITY COUNCIL – Parks and Recreation Director, Charlie Sandberg gave an overview of the funds that will be utilized to cover project costs associated with the purchase of security camera equipment for the Maxwell Adult Center that includes installation.

   Motion was made by Doug Burgess and seconded by Georgette Ford to recommend to City Council for an amendment to utilize the existing unencumbered funds from the Maxwell Adult Center project for the purchase and installation of security camera equipment from Lensec structured cabling. Motion carried unanimously.

10. CONSIDERATION OF AND ACTION ON RECOMMENDING TO CITY COUNCIL TO TERMINATE TASK ORDER NO. 16-005-A WITH HALFF ASSOCIATES FOR THE COMMUNITY CENTER AND GYMNASIUM – PHASE I PROGRAMMING – Parks and Recreation Director, Charlie Sandberg discussed the termination of Task Order No. 16-1005. The consensus of the discussion at the September 24, 2018 joint meeting was that options for a new facility should be explored rather than continuing to pursue renovation/repairs of the existing Community Center facility. Since, Task Order No. 16-005-A was for programming of the existing Community Center and Gymnasium, it is recommended that the Task Order be terminated.

    Mr. Sandberg commented, "We really feel that there are so many projects that are going on right now. We would like for Halff and Associates to focus solely on our softball and soccer project and to complete the Maxwell Adult Center project. We would like to move forward with another company to fulfill the obligation of the Community Center Project."

    Assistant City Manager, Gary Jackson commented, "The professional fees, including reimbursables and the task order for the Community Center and the Gym were at $27, 200.00. There was an overall master agreement, called "prime agreements", that really didn't have any costs associated with it. All the costs were identified through individual task orders by project. The amounts are for professional services, not construction. There was a small amount of programming that was done with Staff early on with the Architect. The vast majority of the work was done by Brinkley, Sargent, Wigington Architects, of which Mr. Steven Springs is the sub-consultant. The recommendation would be that the remainder of this task order be terminated. Per the joint meeting with Council and the Parks and Recreation Commission, we are recommending a contract now directly with Steven Springs and Brinkley Sargent, Wigington Architects and look at alternatives for a new building rather than

renovating the current building. This would be for the design and programming phase only."

Vice President, Georgette Ford asked, "Is there a fine or fee for terminating without cause?"

Mr. Jackson responded, "No. They have already been compensated for the services they have provided."

Motion was made by Doug Burgess and seconded by Laura Hicks to recommend to City Council to terminate Task Order No. 16-005-A with Halff and Associates for the Community Center and Gymnasium-Phase I Programming. Motion carried unanimously.

11. CONSIDERATION OF AND ACTION ON RECOMMENDING TO CITY COUNCIL TO AUTHORIZE NEGOTIATING A PROFESSIONAL SERVICES AGREEMENT WITH BRINKLEY SARGENT WIGINGTON ARCHITECTS FOR PROGRAMMING SERVICES ASSOCIATED WITH THE COMMUNITY CENTER AND GYMNASIUM – Parks and Recreation Director, Charlie Sandberg discussed the company Brinkley Sargent Wigington Architects and their outstanding work done within the State of Texas. Brinkley, Sargent, Wigington has an extensive background in the programming and architectural services of recreational facilities.

President Haight asked, "Have we ever worked with them before?"

Mr. Sandberg responded, "No. In our profession, our peers have."

Jeff Lawther asked, "Did Halff and Associates bring in Brinkley, Sargent, Wigington Architects?"

Mr. Sandberg responded, "Yes."

Motion was made by Georgette Ford and seconded by Jeff Lawther to recommend to City Council to authorize negotiating a professional services agreement with Brinkley, Sargent, Wigington Architects for programming services associated with the Community Center and Gymnasium. Motion carried unanimously.

12. CONSIDERATION OF AND ACTION ON RECOMMENDING TO CITY COUNCIL TO TERMINATE TASK ORDER NO. 16-007 WITH HALFF ASSOCIATES FOR THE DEVELOPMENT OF HIKE AND BIKE TRAILS – Parks and Recreation Director, Charlie Sandberg discussed the reasoning behind the termination recommendation of the task order with Halff and Associates for the development of the Hike and Bike Trails. Mr. Sandberg commented, "The position we are taking on this, is that with all the projects that are being worked on will bring fresh blood to the table. We feel like we can have some real genuine architects to come in with this, maybe the same people that did our nature trail. It is just due to us feeling like they can concentrate on one project and we feel it would be regulated a lot better and have a lot better outcome."

Laura Hicks asked, "What is the $47,500 for? Was it already paid to them?"

Mr. Sandberg responded, "That is the amount it was budgeted for. There has been no money paid to them yet."

Georgette Ford asked, "There isn't any money we have to reimburse them as of now?"

Mr. Sandberg responded, "No."

Georgette Ford asked, "Are we developing a bad relationship with Halff and Associates?"

Assistant City Manager, Gary Jackson commented, "The contract was written this way, so there is no penalty. We have the right to do this, and we feel it is in the best interest of the taxpayers and citizens to proceed in this manner."

Motion was made by Doug Burgess and seconded by Georgette Ford to recommend to City Council to terminate Task Order No. 16-007 with Halff Associates for the development of hike and bike trails. Motion carried unanimously.

13. CONSIDERATION OF AND ACTION ON RECOMMENDING TO CITY COUNCIL TO AUTHORIZE SOLICITATION OF STATEMENTS OF QUALIFICATIONS FOR PROFESSIONAL SERVICES RELATED TO THE DEVELOPMENT OF HIKE AND BIKE TRAILS – Parks and Recreation Director, Charlie Sandberg discussed the process of selecting an architectural service for this project that includes a recommendation to City Council to solicit qualifications of professional services related to the development of Hike and Bike Trails from the Board.

Vice President, Georgette Ford asked, "Do we have any idea about the money from the State?"

Mr. Sandberg responded, "This project is not associated with the State funding."

Assistant City Manager, Gary Jackson commented, "Just to point out, the Hike and Bike is one of the cash projects under the Type B Projects. The majority of the other projects were funded through the Certificates of Obligations."

Motion was made by Georgette Ford and seconded by Jeff Lawther to recommend to Council to authorize solicitation of statements of qualifications for professional services related to the development of Hike and Bike Trails. Motion carried unanimously.

14. CONSIDERATION OF AND ACTION ON AUTHORIZATION AND RECOMMENDATION TO CITY COUNCIL TO UTILIZE EXISTING UNENCUMBERED FUNDS FROM THE MAXWELL ADULT CENTER PROJECT FOR AN AMENDMENT

ADDITIONAL CONSTRUCTION PHASE SERVICES DUE TO THE EXTENDED CONSTRUCTION SCHEDULE – Parks and Recreation Director, Charlie Sandberg discussed additional services due to the Contractor's increased extended construction schedule and the need to continue professional construction administration services to project completion, anticipated for November 2018. That contractor is Steven Springs of Brinkley, Sargent, Wigington Architects.

Jeff Lawther asked, "Is this $14,000 that comes out of the remaining $38,000?"

Mr. Sandberg responded, "Yes. We will still have $24,000 left in the unencumbered account."

Mr. Lawther asked, "Do you anticipate needing that money?"

Mr. Sandberg responded, "I will not stand here and say "never". There isn't anything on the table right now, but we do the walk through tomorrow. We will find out if there might be anything that may sneak up on us. We do not foresee anything at this point."

Mr. Lawther asked, "Does that money become available for other projects?"

Mr. Sandberg, "Yes, it may be used for other projects."

Mr. Jackson commented, "The way it was set up is, once it is completed, if there are funds available, it could be used for another existing and approved Type B project."

Mr. Jackson asked, "Is there still some contractual days that are still pending with the contractor?"

Mr. Sandberg commented, "There are some contractual days that is another expense that will cost between $10,000 to $14,000. This expense is on the table to cover the rain days and extended days."

Laura Hicks asked, "Can the extra money be rolled over to the cash for the Hike and Bike Trail project?"

Mr. Sandberg responded, "Yes, it can be."

Mr. Lawther asked, "Were any of these projects built in with penalties for late completion?"

Mr. Jackson responded, "The term for that is "liquidated damages", I do not believe the Dow Park Project contract had liquidated damages. I am not sure of the soccer field and softball fields project contracts have that either. Liquidated damages were in the Maxwell Adult Center contract, but they were not invoked because it was issues beyond the City's control."

President Haight asked, "If we have to get furniture or equipment for the Maxwell Adult Center, is that included?"
Mr. Sandberg responded, "Yes, we did budget for that."

15. ADJOURN – President Haight adjourned the meeting at 6:04 p.m.

ATTEST: APPROVED:

_____ _____

Shannon Bennett
Board Secretary

T.J. Haight, President
Deer Park Community Development Corporation

City of Deer Park

710 E SAN AUGUSTINE
DEER PARK, TX 77536

Legislation Details (With Text)

File #:	MIN 19-022	**Version:**	1	**Name:**	
Type:	Minutes			**Status:**	Agenda Ready
File created:	1/22/2019			**In control:**	Deer Park Community Development Corporation
On agenda:	1/28/2019			**Final action:**	
Title:	Approval of minutes of special meeting held on January 7, 2019				
Sponsors:					
Indexes:					
Code sections:					
Attachments:	CDC_MS_010719				

Date	Ver.	Action By	Action	Result
1/28/2019	1	Deer Park Community Development Corporation		

Approval of minutes of special meeting held on January 7, 2019

Summary:

Fiscal/Budgetary Impact:

Approval

powered by Legistar™

CITY OF DEER PARK CDC 1-196

710 EAST SAN AUGUSTINE STREET

DEER PARK, TEXAS 77536

Minutes

of

THE SPECIAL MEETING OF THE DEER PARK COMMUNITY DEVELOPMENT CORPORATION BOARD OF DIRECTORS HELD AT THE DEER PARK COUNCIL CHAMBERS, 710 EAST SAN AUGUSTINE STREET, DEER PARK, TEXAS, JANUARY 7, 2019 AT 5:30 P.M., WITH THE FOLLOWING MEMBERS PRESENT:

T.J. HAIGHT	PRESIDENT
GEORGETTE FORD	VICE PRESIDENT
JEFF LAWTHER	MEMBER
LES ELLARD	MEMBER
DOUG BURGESS	MEMBER
LAURA HICKS	MEMBER

OTHER OFFICIALS PRESENT:

JAY STOKES	CITY MANAGER
GARY JACKSON	ASSISTANT CITY MANAGER
SHANNON BENNETT	BOARD SECRETARY
DONNA TODD	TREASURER

1. MEETING CALLED TO ORDER – President T.J. Haight called the meeting to order at 5:30 p.m.

   President T.J. Haight commented, "We would like to welcome our newest member Les Ellard to Position No. 3."

   Parks and Recreation Director, Charlie Sandberg commented, "First of all, I wanted to thank you for all you did last year. Thank you for representing the Community with all the Deer Park Community Development projects and working along with us. I just wanted to thank you all for that."

2. DISCUSSION AND POSSIBLE RECOMMENDATION TO CITY COUNCIL TO APPROVE THE CHANGE ORDER RELATING TO THE EXTENDED MAXWELL ADULT CENTER CANOPY – Parks and Recreation Director, Charlie Sandberg, discussed the concerns voiced by the seniors that "the awning on the exterior of the building does not cover the areas were the sidewalk is cut for wheelchairs and/or walkers." Mr. Sandberg presented the concept of the extension for the Maxwell Adult Center canopy to the Board.

Motion was made by Georgette Ford and seconded by Doug Burgess to recommend to City Council to approve the change order relating to the extended Maxwell Adult Center canopy. Motion carried unanimously.

3. DISCUSSION OF GENERAL CONDITIONS EXTENDED DAYS AND PROJECT COST FOR THE MAXWELL ADULT CENTER – Parks and Recreation Director, Charlie Sandberg gave an overview of the request for funds to be used from contingency and the unencumbered balance for the Maxwell Adult Center Project to be used to pay for the extended days and structural issues. To cover the cost, the $11,186.27 from the Contingency Fund and $26,813.73 from the Unencumbered Fund will be utilized for the expense. That leaves a remaining balance of $11,608.40 in the unencumbered funds for the Maxwell Adult Center Project.

   Jeff Lawther asked, "Do you think you will use the remaining funds?"

   Mr. Sandberg responded, "I am not too sure. There are things that always come up. We are in the punch list state right now in the process. We do not foresee any other expenses for the project."

   Motion was made by Doug Burgess and Laura Hicks to accept the recommendation of the general conditions extended days and project cost for the Maxwell Adult Center.

4. ADJOURN – President T.J. Haight adjourned the meeting at 5:37 p.m.

_____	_____
Shannon Bennett	T.J. Haight, President
Board Secretary	Deer Park Community Development Corporation

City of Deer Park

710 E SAN AUGUSTINE
DEER PARK, TX 77536

Legislation Details (With Text)

File #:	AGR 19-002	**Version:**	1	**Name:**	
Type:	Agreement			**Status:**	Agenda Ready
File created:	1/21/2019			**In control:**	Deer Park Community Development Corporation
On agenda:	1/28/2019			**Final action:**	
Title:	Discussion and possible recommendation to City Council on entering into an agreement with Burditt Consultants, LLC for professional services for the development of the Type B Hike and Bike Trails.				
Sponsors:	Public Works				
Indexes:					
Code sections:					
Attachments:	Deer Park_Hike and Bike Trails Agreement 1-21-19				

Date	Ver.	Action By	Action	Result
1/28/2019	1	Deer Park Community Development Corporation		

Discussion and possible recommendation to City Council on entering into an agreement with Burditt Consultants, LLC for professional services for the development of the Type B Hike and Bike Trails.

Architect is being hired for professional services for the development of the Hike & Bike Trails that will include design, consultation, project management and other services as required to perform and complete the scope of work and services specifically identified in Attachment A of this agreement.

Fiscal/Budgetary Impact:

Type B Funds-

$500,000 Hike & Bike Project - Pay As You Go

$23,500 Professional Services Expenses: Burditt Consultants, LLC

$476,500 Remaining in Hike & Bike Project - Pay As You Go

Recommend to City Council to enter into an agreement with Burditt Consultants, LLC for professional services for the development of the Type B Hike and Bike Trails

powered by Legistar™

AGREEMENT FOR ARCHITECTURAL SERVICES

Hike and Bike Trails Project

This Agreement is made and entered into in Deer Park, Harris County, Texas on the ___ day of _____, 2019; by and between

The City of Deer Park, a Municipal Corporation in the State of Texas

And

BURDITT CONSULTANTS, LLC, ARCHITECT(s) duly licensed, and practicing under the laws of the State of Texas.

Said Agreement being executed by the City pursuant to the City Charter, Ordinances, and Resolutions of the City Council, and by the ARCHITECT for ARCHITECTURAL services hereinafter set forth in connection with the above-designated Project for the City of Deer Park.

DEER PARK retains BURDITT CONSULTANTS, LLC to perform ARCHITECTURAL services related to the design and construction of the Hike and Bike Trails Project in return for consideration to be paid by DEER PARK under terms and conditions set forth below.

ARTICLE 1. SCOPE OF WORK

1.1 ARCHITECT will provide ARCHITECTURAL, design, consultation, project management, and other services as required to perform and complete the Scope of Work & Services specifically identified in Attachment A of this Agreement. The Services Scope of Work (the "Work") and the time schedules set forth in Attachment A are based on information provided by DEER PARK and ARCHITECT. The schedule of milestones and deliverables are essential terms of this Agreement.

1.2 If this information is incomplete or inaccurate, or if site conditions are encountered which materially vary from those indicated by DEER PARK, or if DEER PARK directs ARCHITECT to change the original Scope of Work shown in Attachment A, a written amendment equitably adjusting the costs, performance time and/or terms and conditions, shall be executed by DEER PARK and ARCHITECT.

CB

ARTICLE 2. COMPENSATION

2.1 ARCHITECT bills for its services shall be on a LUMP SUM BASIS as provided in Exhibit "A" of this Agreement. Any OWNER approved Additional Services shall be based upon an approved amount or based upon a time and materials basis using the Schedule of Rates and Terms provided in Exhibit "B" of this Agreement. ARCHITECT has provided an estimate of the fees for TASK I of the Work amounting to $23,500. ARCHITECT will not exceed that estimate without prior approval from DEER PARK. ARCHITECT will notify DEER PARK, for approval, of any proposed revisions to the Schedule of Rates and effective date thereof which shall not be less than thirty (30) days after such notice. Future task fees shall be based upon the subsequent authorization for selected alignments of construction that relate to specific Opinions of Probable Costs provided for in TASK I.

2.2 ARCHITECT will submit monthly invoices for Services rendered, and DEER PARK will make payment within thirty (30) days of receipt of ARCHITECT'S invoices. If DEER PARK objects to all or any portion of an invoice, it will notify ARCHITECT of the same within fifteen (15) days from the date of receipt of the invoice and will pay that portion of the invoice not in dispute, and the parties shall immediately make every effort to settle the disputed portion of the invoice. Prices or rates quoted do not include state or local taxes.

ARTICLE 3. DEER PARK'S RESPONSIBILITIES

3.1 DEER PARK will designate in writing the person or persons with authority to act on DEER PARK's behalf on all matters concerning the work to be performed.

3.2 DEER PARK will furnish to ARCHITECT all existing studies, reports, data and other information available to DEER PARK necessary for performance of the Work, authorize ARCHITECT to obtain additional data as required, and furnish the services of others where necessary for the performance of the Work. ARCHITECT will be entitled to use and rely upon all such information and services.

3.3 Where necessary to performance of the Work, DEER PARK shall arrange for ARCHITECT to have access to any site or property.

ARTICLE 4. PERFORMANCE OF SERVICE

4.1 ARCHITECT's services will be performed within the schedule and time period set forth in Attachment A.

4.2 ARCHITECT shall perform the Work, and any additional services as may be required, for the development of the Project to completion.

4.3 If required, additional services will be performed and completed within the time period agreed to in writing by the parties at the time such services are authorized.

4.4 If any time period within or date by which any of ARCHITECT's services are to be performed is exceeded for reasons outside of ARCHITECT's reasonable control, all rates, measures and amounts of compensation and the time for completion of performance shall be subject to equitable adjustment.

ARTICLE 5. CONFIDENTIALITY

5.1 ARCHITECT will hold confidential all information obtained from DEER PARK, not previously known by ARCHITECT or in the public domain.

ARTICLE 6. STANDARD OF CARE & WARRANTY

6.1 Standard of Care. In performing services, ARCHITECT agrees to exercise professional judgment, made on the basis of the information available to ARCHITECT, and to perform its ARCHITECTURAL services with the professional skill and care of competent design professionals practicing in the same or similar locale and under the same or similar circumstances and professional license. ARCHITECT also agrees to perform its ARCHITECTURAL services as expeditiously as is prudent considering this standard of care. This standard of care shall be judged as of the time and place the services are rendered, and not according to later standards.

6.2 Re-Work. If any failure to meet the foregoing standard of care appears during one year from the date of completion of the service and ARCHITECT is promptly notified thereof in writing, ARCHITECT will at its expense re-perform the nonconforming work.

6.3 The foregoing representation is the sole and express obligation of ARCHITECT and is provided in lieu of all other representations. ARCHITECT does not warrant any products or services of others. ARCHITECT, however, expressly acknowledges that these obligations do not eliminate the applicability of the standard of care to all of its work and that the OWNER may still retain remedies against ARCHITECT following the expiration of the re-work period in contract, tort, or otherwise as the law allows.

ARTICLE 7. INSURANCE

7.1 ARCHITECT will procure and maintain insurance as required by law. At a minimum, ARCHITECT will have the following coverage:

(1) Workers compensation and occupational disease insurance in statutory amounts.

(2) Employer's liability insurance in the amount of $1,000,000.

(3) Automobile liability in the amount of $1,000,000.

cb

(4) Commercial General Liability insurance for bodily injury, death or loss of or damage to property of third persons in the amount of $1,000,000 per occurrence, $2,000,000 in the aggregate.

(5) Professional errors and omissions insurance in the amount of $1,000,000.

7.2 ARCHITECT has provided a Statement of Insurance to DEER PARK demonstrating and reflecting that ARCHITECT has procured and maintains insurance coverage in accordance with the requirements stated above. That Statement of Insurance is Attachment C of this Agreement.

ARTICLE 8. INDEMNITY

8.1 TO THE FULLEST EXTENT PERMITTED BY LAW, ARCHITECT SHALL INDEMNIFY, AND HOLD HARMLESS THE CITY OF DEER PARK, ITS OFFICERS, OFFICIALS, AGENTS, DIRECTORS, AND EMPLOYEES, FROM AND AGAINST ALL CLAIMS, DAMAGES, LOSSES, LAWSUITS, JUDGMENTS, FINES, PENALTIES, OR LIABILITY INCLUDING WITHOUT LIMITATION, ALL EXPENSES OF LITIGATION, INCLUDING EXPERT OR CONSULTANT FEES, COURT COSTS, AND REASONABLE ATTORNEY'S FEES, ARISING OUT OF OR RESULTING FROM BODILY INJURY OR DEATH OF ANY PERSON, OR PROPERTY DAMAGE, OR OTHER HARM TO THE EXTENT SUCH BODILY INJURY, PROPERTY DAMAGE, OR HARM IS CAUSED BY THE NEGLIGENCE, INTENTIONAL TORT, INTELLECTUAL PROPERTY INFRINGEMENT, OR FAILURE TO PAY A SUBCONTRACTOR OR SUPPLIER COMMITTED BY THE ARCHITECT OR THE ARCHITECT'S AGENT, CONSULTANT UNDER CONTRACT, OR ANOTHER ENTITY OVER WHICH THE INDEMNITOR EXERCISES CONTROL.

IF THE CITY DEFENDS AN ACTION, CLAIM, LAWSUIT OR OTHERWISE INCURS ATTORNEY'S FEES AS A RESULT OF AN INDEMNIFIED CLAIM AS STATED ABOVE, ARCHITECT AGREES TO REIMBURSE THE CITY IN PROPORTION TO THE ARCHITECT'S LIABILITY AT THE TIME OF JUDGMENT, AWARD OR SETTLEMENT.

8.2 ARCHITECT agrees to and shall contractually require its consultants and subcontractors of any tier to assume the same indemnification obligations to Indemnities as stated herein.

ARTICLE 9. OWNERSHIP OF DOCUMENTS

9.1 As long as DEER PARK is current in the payment of all undisputed invoices, all work product prepared by the ARCHITECT pursuant to this Agreement, including, but not limited to, all Contract Documents, Plans and Specifications and any computer aided design, shall be the sole and exclusive property of DEER PARK, subject to the ARCHITECT's reserved rights as instruments of service for the purpose of constructing, occupying and maintaining the Project. To the fullest extent permitted by law, reuse or modification of any such documents by OWNER, without ARCHITECT's written permission, shall be at the OWNER's sole risk

CB

and OWNER agrees to indemnify and hold ARCHITECT harmless from all claims, damages, and expenses, including attorneys' fees, arising out of reuse by OWNER or by others acting through the OWNER.

9.2 ARCHITECT's technology, including without limitation customary techniques and details, skill, processes, knowledge, and computer software developed or acquired by ARCHITECT or its Consultants to prepare and manipulate the data which comprises the instruments of services shall all be and remain the property of the ARCHITECT.

ARTICLE 10. INDEPENDENT CONTRACTOR

10.1 The ARCHITECT is an independent contractor and shall not be regarded as an employee or agent of the DEER PARK.

ARTICLE 11. COMPLIANCE WITH FEDERAL, STATE AND LOCAL LAWS

11.1 The ARCHITECT shall observe all applicable provisions of the federal, state and local laws and regulations, including those relating to equal opportunity employment.

ARTICLE 12. SAFETY

12.1 DEER PARK shall inform the ARCHITECT and its employees of any applicable site safety procedures and regulations known to DEER PARK as well as any special safety concerns or dangerous conditions at the site. The ARCHITECT and its employees will be obligated to adhere to such procedures and regulations once notice has been given.

12.2 ARCHITECT shall not have any responsibility for overall job safety at the site. If in ARCHITECT's opinion, its field personnel are unable to access required locations or perform required services in conformance with applicable safety standards, ARCHITECT may immediately suspend performance until such safety standards can be attained. If within a reasonable time site operations or conditions are not brought into compliance with such safety standards, ARCHITECT may in its discretion terminate its performance, in which event, DEER PARK shall pay for services and termination expenses as provided in Article 18.

ARTICLE 13. LITIGATION

13.1 At the request of DEER PARK and upon reasonable payment of the same, ARCHITECT agrees to provide testimony and other evidence in any litigation, hearings or proceedings to which DEER PARK is or becomes a party in connection with the work performed under this Agreement, unless DEER PARK and the ARCHITECT are adverse to one-another in any such litigation.

CB

13.2 Any litigation arising out of this Agreement between DEER PARK and ARCHITECT shall be heard by the state district courts of Harris County.

ARTICLE 14. NOTICE

14.1 All notices to either party by the other shall be deemed to have been sufficiently given when made in writing and delivered in person, by electronic mail, facsimile, certified mail or courier to the address of the respective party or to such other address as such party may designate.

ARTICLE 15. TERMINATION

15.1 The performance of work may be terminated or suspended by DEER PARK, for any reason. Such suspension or termination shall be subject to notice of DEER PARK's election to either suspend or terminate the Agreement fifteen (15) days' prior to the effective suspension or termination date. The Notice shall specify the extent to which performance of work is suspended or terminated and the date upon which such action shall become effective. In the event work is terminated or suspended by DEER PARK prior to the completion of services contemplated hereunder, ARCHITECT shall be paid for (i) the services rendered to the date of termination or suspension and reasonable services provided to effectuate a professional and timely project termination or suspension.

ARTICLE 16. SEVERABILITY

16.1 If any term, covenant, condition or provision of this Agreement is found by a court of competent jurisdiction to be invalid, void or unenforceable, the remainder of this Agreement shall remain in full force and effect, and shall in no way be affected, impaired or invalidated thereby.

ARTICLE 17. WAIVER

17.1 Any waiver by either party or any provision or condition of this Agreement shall not be construed or deemed to be a waiver of a subsequent breach of the same provision or condition, unless such waiver is so expressed in writing and signed by the party to be bound.

ARTICLE 18. GOVERNING LAW

18.1 This Agreement will be governed by and construed and interpreted in accordance with the laws of the State of Texas.

CB

ARTICLE 19. CAPTIONS

19.1 The captions contained herein are intended solely for the convenience of reference and shall not define, limit or affect in any way the provisions, terms and conditions hereof or their interpretation.

ARTICLE 20. ENTIRE AGREEMENT

20.1 This Agreement, its articles, provision, terms, and attached Schedules represent the entire understanding and agreement between DEER PARK and ARCHITECT and supersede any and all prior agreements, whether written or oral, and may be amended or modified only by a written amendment signed by both parties.

This Agreement is effective on the last day signed.

BURDITT CONSULTANTS, LLC	**The City of Deer Park**
By Charles Burditt	By
Name CHARLES BURDITT	Name
Title PRESIDENT	Title
Date 1-21-19	Date

SCHEDULE A
SCOPE OF WORK

December 19, 2019

Sent Via Email: csandberg@deerparktx.org

Charlie Sandberg
Parks and Recreation Director
City of Deer Park
710 E. San Augustine
Deer Park, TX 77536

RE: Professional Design Services; Phase 2 Hike and Bike Trail Improvements

Dear Charlie,

We are excited to see the City move forward with the Phase 2 Hike and Bike Trail Improvements as planned in the *Parks, Recreation, and Open Space Master Plan*. Based upon our discussions with regards to scope, timing and delivery method; the following is a proposed scope and fees for this project.

The attached Exhibit "A" provides a general understanding and outline of services to be provided along with our fee proposal. Our proposal recommends that the initial phase of services include the entire Hike and Bike Trail Improvements and routing be master planned and conceptualized as the first assignment. The resulting Master Plan should then be used to determine the appropriate segments for actual construction priority in both design and implementation. Opinions of Probable Cost will then have greater relevance and benefits can be more readily understood by staff and Council. We will have additional discussions regarding the project scheduling and project bidding/construction, etc. We look forward to meeting further upon initiation of the project kickoff.

While addressed throughout the Scope of Work, it should be expressly pointed out that our proposal of work includes all required landscape architecture only. In this scope of services, we have suggested establishing the complete master plan, including all routings and priorities in advance of engaging civil engineering services. Any civil engineering, geotechnical studies, surveying and TDLR accessibility review will be considered additional services during future phases of design outside of this contract.

All plans will be prepared under the direct supervision and Landscape Architect of Record Claudia Walker, RLA #2987, with appropriate seals affixed by representative professionals responsible for other portions of the project.

We are prepared to begin upon execution of this Proposal/Letter of Agreement, a Professional Services Agreement, and a Purchase Order (if applicable prior to proceeding).

Mail: 310 Longmire Road www.burditt.com Houston 281-447-2111
P. O. Box 1424 Conroe 936-756-3041
Conroe, Texas 77305 Conroe, Texas 77304 Fax 936-539-3240

cb

Thank you for the confidence placed in our firm to execute this important project. If approved, we look forward to working once again with the Parks and Recreation Staff. Also, we would enjoy discussing any questions or comments you have regarding revisions you see as appropriate.

Very sincerely,

Paul S. Howard

Paul S. Howard

/psh

cc: Claudia Walker, RLA

Attachment: Exhibit "A" Scope of Services
Terms and Conditions
Hourly Rates

Statement of Jurisdiction: The Texas Board of Architectural Examiners has jurisdiction over complaints regarding a registrant's professional practices. The Board may be contacted at:

TEXAS BOARD OF ARCHITECTURAL EXAMINERS
P. O. BOX 12337
AUSTIN, TEXAS 78711-2337

Approval and Notice To Proceed:

_____ **Date** _____

By:

CB

Exhibit "A"
Scope of Services

UNDERSTANDING OF WORK

The initial project intentions are to develop plans and specifications for implementation of proposed Hike and Bike Trail alignments identified within the *2013 Parks, Recreation, and Open Space Master Plan*. A Site Feasibility Study is needed to review the proposed trail alignments and probable cost estimates and refine them with consideration of current site conditions such as engineering requirements for drainage, obstructions, available right-of-way, and other issues. Upon completion of a site feasibility study, an implementation plan will be developed for phased construction.

Task 1: SITE FEASIBILITY AND TRAIL MASTER PLAN IMPLEMENTATION PLAN, STAFF INTERVIEWS/MEETINGS, PRELIMINARY DESIGN THROUGH SCHEMATIC DESIGN DEVELOPMENT TASKS, INITIAL OPINIONS OF PROBABLE COST (OPC):

1. Conduct initial Project Kickoff Meeting with Staff and Design Team. During this meeting, a recommended Project Schedule will be presented covering an approximate planning and design period(s). Tasks will be addressed, and goals and objectives reaffirmed. A recommended schedule will be presented and refined during meeting.
2. During initial meeting with Staff, we will coordinate again on design intentions and design criteria, improvements and limits of work, team member roles.
3. Receive and review available survey information such as topography, boundary, easements, and utilities (all as applicable specific and relevant assignments).
4. Review applicable documents as supplied by Staff as to relevant regulatory and current City code status with local entity.
5. Conduct initial site issues and field inspection regarding general topography, accessibility, drainage, and suitability for intended uses.
6. Develop initial summary from meetings and site visits detailing facts and restating goals.
7. Review and provide written documentation of site constraints and opportunities considered to be site engineering related.
8. Design in accordance with Deer Park Land Development Regulations.
9. Prepare Site Feasibility Study and Implementation Plan report with included Opinion of Probable Costs (OPCs), phasing strategy, and schematic design of alignments.
10. Respond to input from staff and make revisions.
11. Finalize Hike and Bike Trail Site Feasibility Study and Implementation Plan document.

PROFESSIONAL FEES:

Task I: Site Feasibility and Implementation Plan, Staff Interviews/Meetings, Preliminary Design through Schematic Design Development, Initial Opinions of Probable Cost (OPC):

Fees are proposed on a fixed Lump Sum Basis at the following:

Task I: $23,500

Fees included in this proposal are for Landscape Architecture services only. Any required or requested Civil Engineering, Surveying, Geotechnical, or other professional sub-consultant services will be considered additional services provided on a COST PLUS TEN PERCENT BASIS (10%). Professional Services provided by BURDITT beyond the scope of this contract are subject to rates and terms set forth in the attached *Burditt 2018 Hourly Rates* or on a Lump Sum or Fixed Basis.

UB

SERVICES TO BE PERFORMED BY CITY

1. Design Studies, Criteria, Data
    a. As-built plans for existing facilities and facilities adjacent to this project, if available.
    b. Existing geotechnical reports and data for existing facilities recently completed within the property and adjacent to the site, if available for reference only.
    c. Utility information (plans, maps, etc.) both current and archived within the CITY of Deer Park, if available.
    d. All available current CITY of Deer Park GIS, aerials and available survey information to date.
2. Public Involvement
    a. Provide guidance on selecting appropriate stakeholders for public meetings(s).
    b. Sponsor and conduct public meetings.
3. Field Surveying and Photogrammetry
    a. Provide all available survey and photogrammetry information to date.
4. Drainage
    a. Provide available information and studies on existing drainage areas on and off-site.
    b. Provide hydraulic design criteria for project design.
    c. Provide standard details and specifications as necessary to assist design CONSULTANT.
5. Miscellaneous
    a. Provide direction necessary for aesthetic hike and bike trail design standards, treatment of proposed structures, amenities, parking and planting.
    b. Provide copies of all licensing agreements, utility agreements and other legal instruments related to the project.
    c. Acquire right-of-entry on any property not owned by the CITY should it be determined necessary to complete the scope of work identified within this agreement.
    d. It is the CITY's responsibility to facilitate and coordinate with private property owners, if deemed necessary.
    e. Provide any other pertinent information to assist the design CONSULTANT.

CB

TERMS AND CONDITIONS

ADDITIONAL SERVICES

Additional assignments outside the scope of work will be invoiced at the Burditt established hourly rates. Additional assignments include, but are not limited to, any changes due to revisions in the original scope of work, base data relating to this matter, any additional meetings or services and any such services requested by Client. Additional services will be provided, with prior authorization from Client.

PAYMENT OF FEES

For the scope of services stated herein, Client agrees to pay Consultant the compensation stated in this Agreement. Consultant agrees to submit invoices monthly for services rendered. Invoices shall be forwarded upon completion or monthly, based upon the percentage of completion. Invoices are due and payable, in Conroe, Texas, within 30 days of receipt. Any invoice payment due past 30 days will be subject to interest at the rate of the lesser of (i) one and one-half percent (1 1/2%) per month or (ii) the maximum rate allowed by law.

STANDARD OF CARE

The standard of care for all professional services performed or furnished by Consultant under this Agreement will be the skill and care used by members of Consultant's profession practicing under similar circumstances at the same time and in the same locality. Consultant makes no warranties, express or implied, under this Agreement or otherwise, in connection with Consultant's services.

RISK ALLOCATION

Burditt Consultants, LLC agrees to carry out and perform the services herein agreed to in a professional and competent manner. In recognition of the relative risks, rewards, and benefits of the project both to the Client and Burditt, the risks have been allocated so that the Client agrees that, to the fullest extent permitted by law, Burditt's total liability to the Client, for any and all claims, losses, expenses, damages or claim expenses arising out of this agreement, from any cause or causes, shall not exceed the total amount of Burditt's fee or other amount agreed upon when added under Special Conditions. Such causes include, but are not limited to, Burditt's negligence, errors, omissions, strict liability, breach of contract or breach of warranty.

USE OF ELECTRONIC MEDIA

Copies of documents that may be relied upon by Client are limited to the printed copies (also known as hard copies) that are signed or sealed by Consultant. Files in electronic media format or text, data, graphic or other types that are furnished by Consultant to Client are only for convenience of Client. Any conclusion or information obtained or derived from such electronic files will be at the user's sole risk. When transferring documents in electronic media format, Consultant makes no representations to long-term compatibility, usability, or readability of documents resulting from the use of software application packages, operating systems or computer hardware differing from those in use by Consultant at the beginning of this assignment.

HAZARDOUS ENVIRONMENTAL CONDITIONS

It is acknowledged by both parties that Consultant's scope of services does not include any services related to the presence at the site of asbestos, PCBs, petroleum, hazardous waste or radioactive materials. Client acknowledges that Consulting is performing professional services for Client and Consultant is not and shall not be required to become an "arranger," "operator," "generator" or "transporter" of hazardous substances, as defined in the Comprehensive Environmental Response, Compensation, and Liability Act of 1990 (CERCLA).

STATEMENT OF PROBABLE COSTS

When included in Consultant's scope of service, statements, opinions or estimates of probable construction cost are prepared on the basis of Consultant's experience and qualifications and represent Consultant's judgment as a professional general familiar with the industry. However, since Consultant has no control over the cost of labor, materials, equipment or services furnished by others, over contractor's methods of determining prices, or over competitive bidding or market conditions, Consultant cannot and does not guarantee that proposals, bids, or actual construction cost will not vary from Consultant's opinions or estimates of probable construction cost.

CB

REIMBURSABLE EXPENSES
Necessary reimbursable expenses, such as copies (CAD plots), blue or blackline prints, xerox enlargements, shipping, etc., shall be paid by Client at cost plus ten percent (10)% after prior approval by City staff.

FORCE MAJEURE
Circumstances or events may occur that are outside the control of either party. Neither party shall be deemed in default of this Agreement to the extent that any delay or failure in the performance of its obligations results from any cause beyond its reasonable control and without its negligence.

REIMBURSABLE EXPENSES
Necessary reimbursable expenses, such as mileage ($.50 per mile), CAD plots), renderings on boards for public input meetings, blue or blackline prints, xerox enlargements, shipping, etc., shall be paid by Client at cost plus ten percent (10)% after prior approval by City staff.

OPINIONS OF COST
When included in Consultant's scope of service, opinions or estimates of probable construction cost are prepared on the basis of Consultant's experience and qualifications and represent Consultant's judgment as a professional general familiar with the industry. However, since Consultant has no control over the cost of labor, materials, equipment or services furnished by others, over contractor's methods of determining prices, or over competitive bidding or market conditions, Consultant cannot and does not guarantee that proposals, bids, or actual construction cost will not vary from Consultant's opinions or estimates of probable construction cost.

TDLR DOCUMENTATION:
Pursuant to Texas Accessibility Standards (TAS) and ADA Requirements, Client is responsible for any fees associated with the review, filing and recording of the Landscape Construction Documents. If an Elimination of Architectural Barriers (EAB) project number is available, Client shall provide Burditt with the number prior to finalization of the Construction Documents. Pursuant to the requirements of the law, Burditt will file the plans for review.

CONSTRUCTION PHASE SERVICES:
If this Agreement provides for any construction phase services by Consultant, it is understood that the Contractor, not Consultant, is responsible for the construction of the project, and that Consultant is not responsible for the acts or omissions of any contractor, subcontractor or material supplier; for safety precautions, programs or enforcement; or for construction means, methods, techniques, sequences and procedures employed by the Contractor.

OWNERSHIP OF DOCUMENTS
All documents prepared or furnished by Consultant pursuant to this Agreement are instruments of Consultant's professional service, and Consultant shall retain an ownership and property interest therein. Consultant grants Client a license to use instruments of Consultant's professional service for the purpose of constructing, occupying and maintaining the Project. To the fullest extent permitted by law, reuse or modification of any such documents by Client, without Consultant's written permission, shall be at Client's sole risk, and Client agrees to indemnify and hold Consultant harmless from all claims, damages and expenses, including attorneys' fees, arising out of reuse by Client or by others acting through Client.

cb

Exhibit "B"

BURDITT CONSULTANTS, LLC
2018 HOURLY RATES

Hourly Basis Rates for Professional Services are as follows:

CLASSIFICATION	HOURLY RATE
Principal	$170
Project Manager	$150
Project Architect	$135
Project Landscape Architect	$135
Sr. Planner	$135
Sr. Urban Forester	$135
Wetland Scientist	$135
Natural Resource Planner	$135
Licensed Irrigator	$110
Geographic Information Systems (GIS) Planner	$110
Landscape Architecture Associate	$110
Architecture Associate	$110
CAD Designer II	$ 90
CAD Designer I	$ 70
Administrative Assistant II	$ 70
Administrative Assistant I	$ 55

Invoices are prepared monthly with payments due upon receipt. Interest at the rate of 1 ½ % per month will be charged on all accounts not paid by the 30th day following the billing date. Reimbursable expenses and necessary sub-consultants for Civil, Structural or MEP Engineering and approved by Client shall be invoiced at cost plus ten percent (10%).

B

City of Deer Park

710 E SAN AUGUSTINE
DEER PARK, TX 77536

Legislation Details (With Text)

File #:	PUR 19-002	**Version:**	1	**Name:**	
Type:	Purchase			**Status:**	Agenda Ready
File created:	1/22/2019			**In control:**	Deer Park Community Development Corporation
On agenda:	1/28/2019			**Final action:**	
Title:	Discussion and possible recommendation to City Council to purchase a double face, internally illuminated monument sign for the Maxwell Adult Center.				
Sponsors:					
Indexes:					
Code sections:					
Attachments:	NS18 30315A Deer park Maxwell Ault Ctr- 1201 Center Street. - Deer park, TX - Monument Business Agreement - Deer Park Maxwell Adult Center - Option 1 - 12.19.2018				

Date	Ver.	Action By	Action	Result
1/28/2019	1	Deer Park Community Development Corporation		

Discussion and possible recommendation to City Council to purchase a double face, internally illuminated monument sign for the Maxwell Adult Center.

We are replacing the old Maxwell Adult Center sign that is outdated with a new sign that reflects the new construction of the Maxwell Adult Center

$11, 608.40	Remaining balance in the unencumbered Maxwell Project
$11, 300.00	Expense for new Maxwell Sign
$308.40	Remaining balance in the unencumbered Maxwell Project

Recommend to City Council to purchase a double face, internally illuminated monument sign for the Maxwell Adult Center.

powered by Legistar™

SIGN TYPE A

REMOVE AND DISCARD EXISTING SIGN PAN TYPE FACES -
REPLACE WITH NEW VACUUM FORMED FACES
CLEAN AND REPAINT CABINET AND FCO ADDRESS
RETROFIT SIGN WITH NEW WHITE LED LIGHTS

OPTION #1

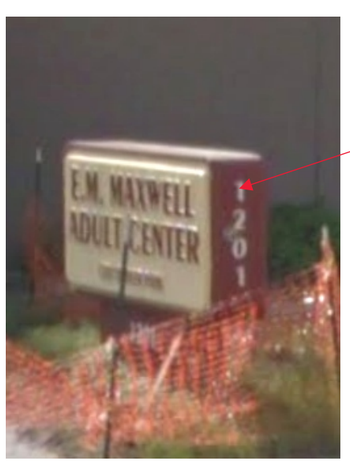

EXISTING

SIGN DETAILS
SCALE: NOT TO SCALE

SIGN DETAILS
SCALE: 1/2" = 1'-0"

CLIENT APPROVAL SIGNED: DATE:

LANDLORD APPROVAL SIGNED: DATE:

SALES APPROVAL

National Signs
2611 EL CAMINO
HOUSTON, TEXAS 77054
TEL: 713.863.0600 • FAX: 713.863.7585
www.NationalSigns.com

PROJECT: E.M. MAXWELL ADULT CTR
LOCATION: 1201 CENTER STREET
CITY/STATE: DEER PARK, TX ...
SALES REP: REBECCA BRUCE
DATE : 11.30.18
DRAWN BY: JORGE QUALITY RVIEW
DRAWING#: NS18 30315 FABRICATION READY

COPYRIGHT

THIS RENDERING IS THE PROPERTY OF NATIONAL SIGNS, LLC. ANY REPRODUCTION OR EXHIBITION OF THIS DRAWING IS STRICTLY PROHIBITED. ©2018 NATIONAL SIGNS, LLC. THIS RENDERING MAY NOT BE USED TO CONSTRUCT AND/OR BUILD WHAT IS DEPICTED HEREIN WITHOUT THE EXPRESS WRITTEN CONSENT OF NATIONAL SIGNS, LLC.

120 VOLT ELECTRICAL SERVICE

	SIGN	LED DISPLAY
ELECTRICAL LOAD		
20 AMP CIRCUIT(S)		

CLIENT TO PROVIDE ALL PRIMARY ELECTRICAL SERVI
TO THE SIGN UNLESS OTHERWISE SPECIF

REVISIONS

UL INSTALLATION REQUIREMENTS

THIS SIGN IS INTENDED TO BE INSTALLED IN ACCORDANCE WITH THE REQUIREMENTS OF ARTICLE 600 OF THE NATIONAL ELECTRICAL CODE AND/OR OTHER APPLICABLE LOCAL CODES. THIS INCLUDES PROPER GROUNDING AND BONDING OF THE SIGN.

SIGN TYPE A — QUANTITY: 2 (1 PER SIDE)

REMOVE AND DISCARD EXISTING SIGN PAN TYPE FACES - REPLACE WITH NEW VACUUM FORMED FACES
CLEAN AND REPAINT CABINET BASE AND FCO ADDRESS
RETROFIT SIGN WITH NEW WHITE LED LIGHTS

SPECIFICATIONS: FOR EXISTING CABINET & ADDRESS
- EXISTING - CABINET: CLEAN AND RE-PAINT P3
- EXISTING - CABINET BASE: CLEAN AND RE-PAINT P1
- EXISTING - FLAT CUT OUT ADDRESS: CLEAN AND RE-PAINT P2

SPECIFICATIONS: FOR NEW FACES
- .150 CLEAR POLYCARBONATE VACUUM FORMED PAN FACE
- 1 ½" PAN DEPTH - SECOND SURFACE PAINTED P4
- ½" EMBOSSED COP - SECOND SURFACE - PAINTED P5 AND P6

RETROFIT SIGN WITH NEW WHITE LED LIGHTS AND POWER SUPPLIES

FINISH SCHEDULE

PAINT COLORS - FOR SIGN CABINET - SATIN FINISH
- P1: BLACK
- P2: WHITE
- P3: DEER PARK BURGUNDY

COLORS - FOR POLYCARBONATE FACES
- P4: TRANS. WHITE
- P5: TRANS. BURGUNDY 230-49
- P6: BLACK

APPROVED BY: _____

SURVEY REQUIRED PRIOR TO PRODUCTION

OPTION #1

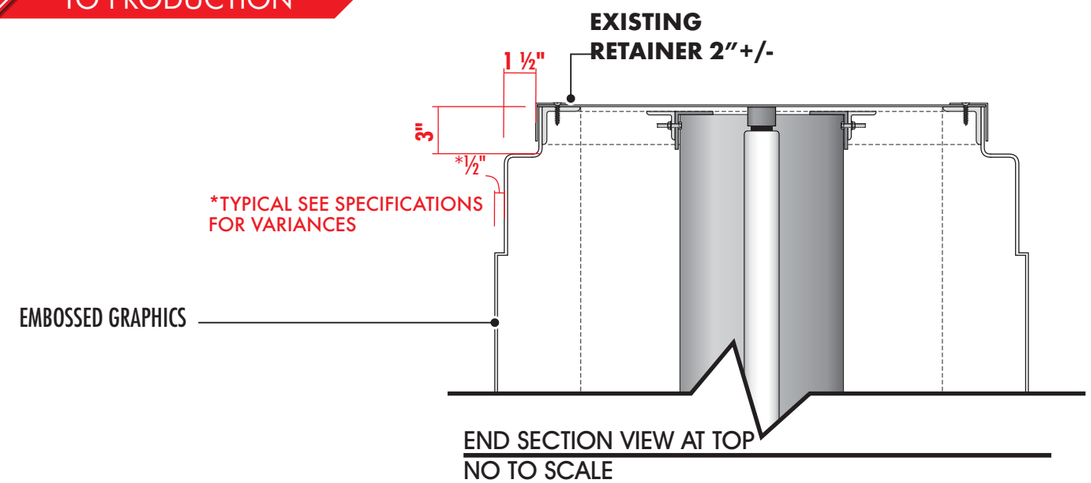

END SECTION VIEW AT TOP
NO TO SCALE

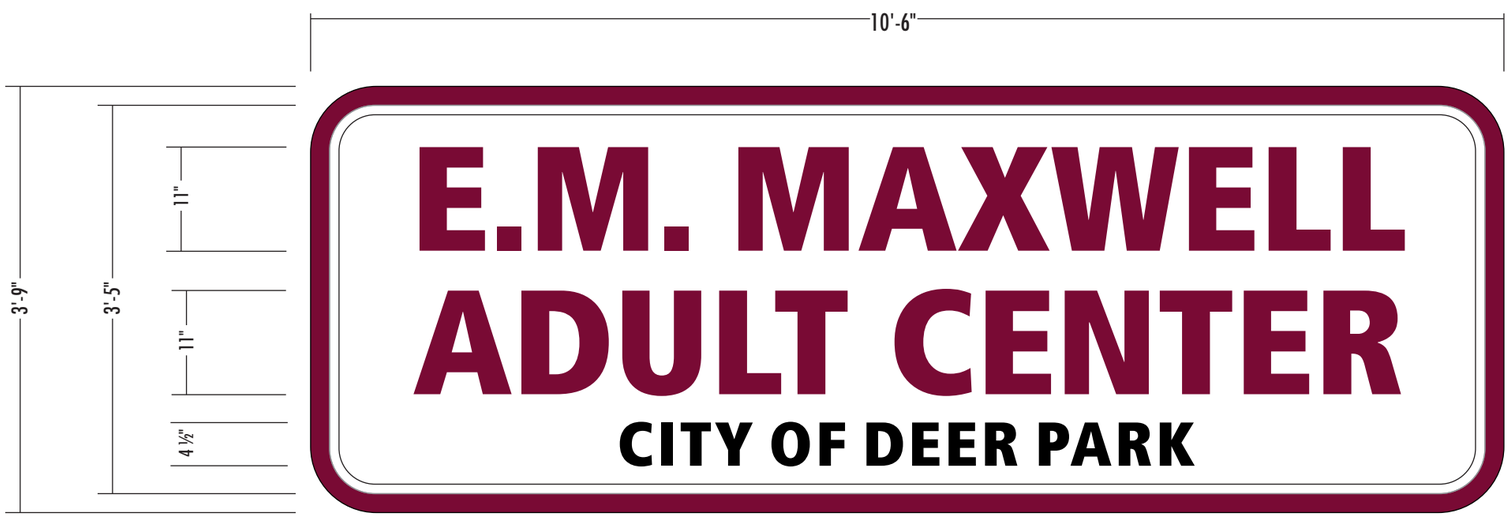

SIGN DETAILS
SCALE: 3/4" = 1'-0"

CLIENT APPROVAL SIGNED: DATE: LANDLORD APPROVAL SIGNED: DATE: SALES APPROVAL

National Signs
2611 EL CAMINO
HOUSTON, TEXAS 77054
TEL: 713.863.0600 • FAX: 713.863.7585
www.NationalSigns.com

PROJECT: E.M. MAXWELL ADULT CTR
LOCATION: 1201 CENTER STREET
CITY/STATE: DEER PARK, TX ...
SALES REP: REBECCA BRUCE
DATE: 11.30.18
DRAWN BY: JORGE QUALITY RVIEW
DRAWING#: NS18 30315 FABRICATION READY

COPYRIGHT

THIS RENDERING IS THE PROPERTY OF NATIONAL SIGNS, LLC. ANY REPRODUCTION OR EXHIBITION OF THIS DRAWING IS STRICTLY PROHIBITED. ©2018 NATIONAL SIGNS, LLC. THIS RENDERING MAY NOT BE USED TO CONSTRUCT AND/OR BUILD WHAT IS DEPICTED HEREIN WITHOUT THE EXPRESS WRITTEN CONSENT OF NATIONAL SIGNS, LLC.

120 VOLT ELECTRICAL SERVICE

	SIGN	LED DISPLAY
ELECTRICAL LOAD		
20 AMP CIRCUIT(S)		

CLIENT TO PROVIDE ALL PRIMARY ELECTRICAL SERVI TO THE SIGN UNLESS OTHERWISE SPECIF

REVISIONS

UL INSTALLATION REQUIREMENTS

THIS SIGN IS INTENDED TO BE INSTALLED IN ACCORDANCE WITH THE REQUIREMENTS OF ARTICLE 600 OF THE NATIONAL ELECTRICAL CODE AND/OR OTHER APPLICABLE LOCAL CODES. THIS INCLUDES PROPER GROUNDING AND BONDING OF THE SIGN.

SIGN TYPE A

REMOVE AND DISCARD EXISTING SIGN PAN TYPE FACES -
REPLACE WITH NEW VACUUM FORMED FACES
CLEAN AND REPAINT CABINET AND FCO ADDRESS
RETROFIT SIGN WITH NEW WHITE LED LIGHTS

OPTION #2

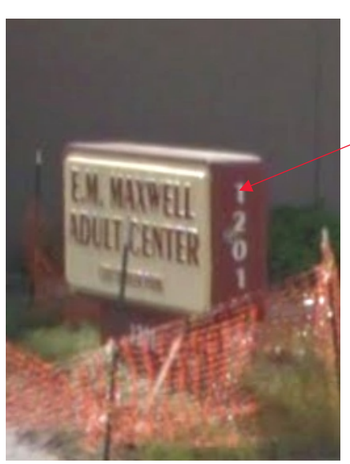

EXISTING

SIGN DETAILS
SCALE: NOT TO SCALE

SIGN DETAILS
SCALE: 1/2" = 1'-0"

CLIENT APPROVAL SIGNED: DATE:

LANDLORD APPROVAL SIGNED: DATE:

SALES APPROVAL

National Signs
2611 EL CAMINO
HOUSTON, TEXAS 77054
TEL: 713.863.0600 • FAX: 713.863.7585
www.NationalSigns.com

PROJECT: E.M. MAXWELL ADULT CTR
LOCATION: 1201 CENTER STREET
CITY/STATE: DEER PARK, TX ...
SALES REP: REBECCA BRUCE
DATE : 11.30.18
DRAWN BY: JORGE QUALITY RVIEW
DRAWING#: NS18 30315 FABRICATION READY

COPYRIGHT

THIS RENDERING IS THE PROPERTY OF NATIONAL SIGNS, LLC. ANY REPRODUCTION OR EXHIBITION OF THIS DRAWING IS STRICTLY PROHIBITED. ©2018 NATIONAL SIGNS, LLC. THIS RENDERING MAY NOT BE USED TO CONSTRUCT AND/OR BUILD WHAT IS DEPICTED HEREIN WITHOUT THE EXPRESS WRITTEN CONSENT OF NATIONAL SIGNS, LLC.

120 VOLT ELECTRICAL SERVICE

	SIGN	LED DISPLAY
ELECTRICAL LOAD		
20 AMP CIRCUIT(S)		

CLIENT TO PROVIDE ALL PRIMARY ELECTRICAL SERVI
TO THE SIGN UNLESS OTHERWISE SPECIF

REVISIONS

UL INSTALLATION REQUIREMENTS

THIS SIGN IS INTENDED TO BE INSTALLED IN ACCORDANCE WITH THE REQUIREMENTS OF ARTICLE 600 OF THE NATIONAL ELECTRICAL CODE AND/OR OTHER APPLICABLE LOCAL CODES. THIS INCLUDES PROPER GROUNDING AND BONDING OF THE SIGN.

SIGN TYPE A — QUANTITY: 2 (1 PER SIDE)

REMOVE AND DISCARD EXISTING SIGN PAN TYPE FACES - REPLACE WITH NEW VACUUM FORMED FACES
CLEAN AND REPAINT CABINET BASE AND FCO ADDRESS
RETROFIT SIGN WITH NEW WHITE LED LIGHTS

SPECIFICATIONS: FOR EXISTING CABINET & ADDRESS
- EXISTING - CABINET: CLEAN AND RE-PAINT P3
- EXISTING - CABINET BASE: CLEAN AND RE-PAINT P1
- EXISTING - FLAT CUT OUT ADDRESS: CLEAN AND RE-PAINT P2

SPECIFICATIONS: FOR NEW FACES
- .150 CLEAR POLYCARBONATE VACUUM FORMED PAN FACE
- 1 ½" PAN DEPTH - SECOND SURFACE PAINTED P4
- ½" EMBOSSED COP - SECOND SURFACE - PAINTED P5 AND P6

RETROFIT SIGN WITH NEW WHITE LED LIGHTS AND POWER SUPPLIES

FINISH SCHEDULE

PAINT COLORS - FOR SIGN CABINET - SATIN FINISH
- P1: BLACK
- P2: WHITE
- P3: DEER PARK BURGUNDY

COLORS - FOR POLYCARBONATE FACES
- P4: TRANS. WHITE
- P5: TRANS. BURGUNDY 230-49
- P6: PTM - TRANS. GOLD NUGGET 230-131

APPROVED BY: _____

SURVEY REQUIRED PRIOR TO PRODUCTION

OPTION #2

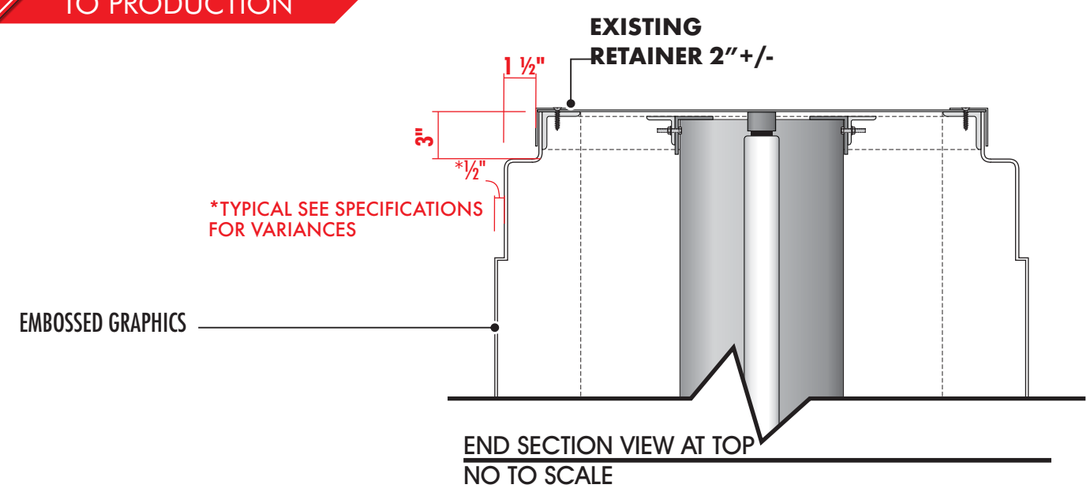

END SECTION VIEW AT TOP
NO TO SCALE

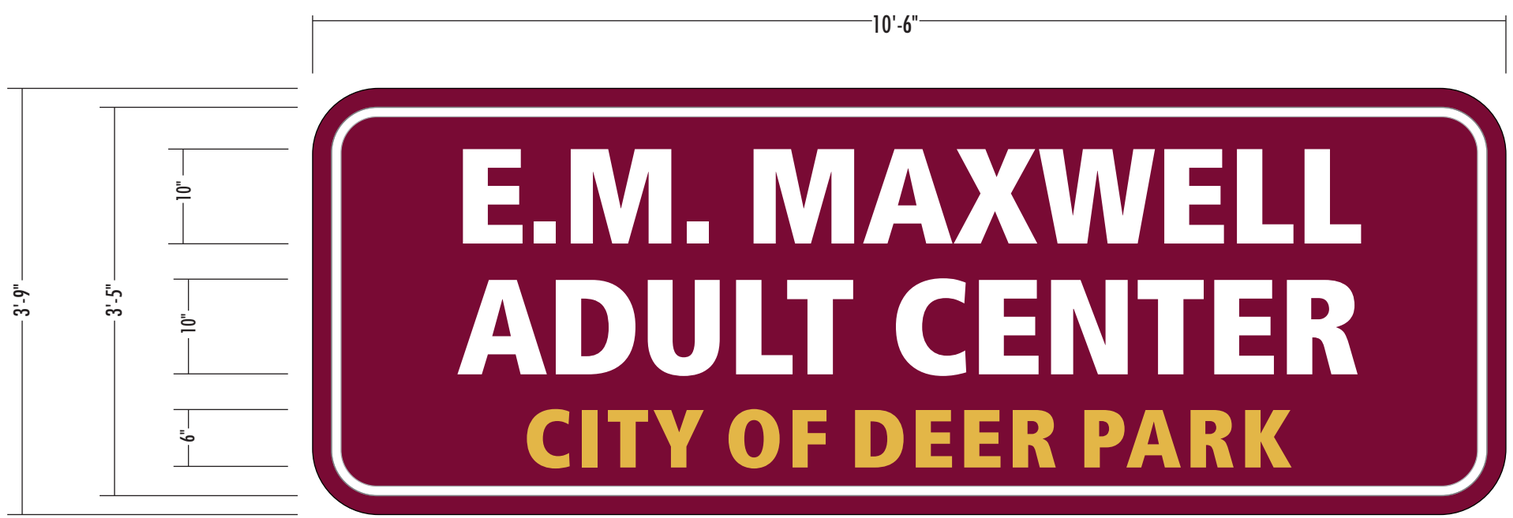

SIGN DETAILS
SCALE: 3/4" = 1'-0"

CLIENT APPROVAL SIGNED: DATE: LANDLORD APPROVAL SIGNED: DATE: SALES APPROVAL

National Signs
2611 EL CAMINO
HOUSTON, TEXAS 77054
TEL: 713.863.0600 • FAX: 713.863.7585
www.NationalSigns.com

PROJECT: E.M. MAXWELL ADULT CTR
LOCATION: 1201 CENTER STREET
CITY/STATE: DEER PARK, TX ...
SALES REP: REBECCA BRUCE
DATE: 11.30.18
DRAWN BY: JORGE QUALITY RVIEW
DRAWING#: NS18 30315 FABRICATION READY

COPYRIGHT

THIS RENDERING IS THE PROPERTY OF NATIONAL SIGNS, LLC. ANY REPRODUCTION OR EXHIBITION OF THIS DRAWING IS STRICTLY PROHIBITED. ©2018 NATIONAL SIGNS, LLC. THIS RENDERING MAY NOT BE USED TO CONSTRUCT AND/OR BUILD WHAT IS DEPICTED HEREIN WITHOUT THE EXPRESS WRITTEN CONSENT OF NATIONAL SIGNS, LLC.

120 VOLT ELECTRICAL SERVICE

	SIGN	LED DISPLAY
ELECTRICAL LOAD		
20 AMP CIRCUIT(S)		

CLIENT TO PROVIDE ALL PRIMARY ELECTRICAL SERVI TO THE SIGN UNLESS OTHERWISE SPECIF

REVISIONS

UL INSTALLATION REQUIREMENTS

THIS SIGN IS INTENDED TO BE INSTALLED IN ACCORDANCE WITH THE REQUIREMENTS OF ARTICLE 600 OF THE NATIONAL ELECTRICAL CODE AND/OR OTHER APPLICABLE LOCAL CODES. THIS INCLUDES PROPER GROUNDING AND BONDING OF THE SIGN.

SIGN TYPE A

REMOVE AND DISPOSE OF EXISTING FLUORESCENT LAMPS, BALLASTS AND LAMP TRACKS.
RETROFIT SIGN WITH NEW LED LIGHT ALUMINUM TUBE FRAMING WHITE LED LIGHTS AND POWER SUPPLIES

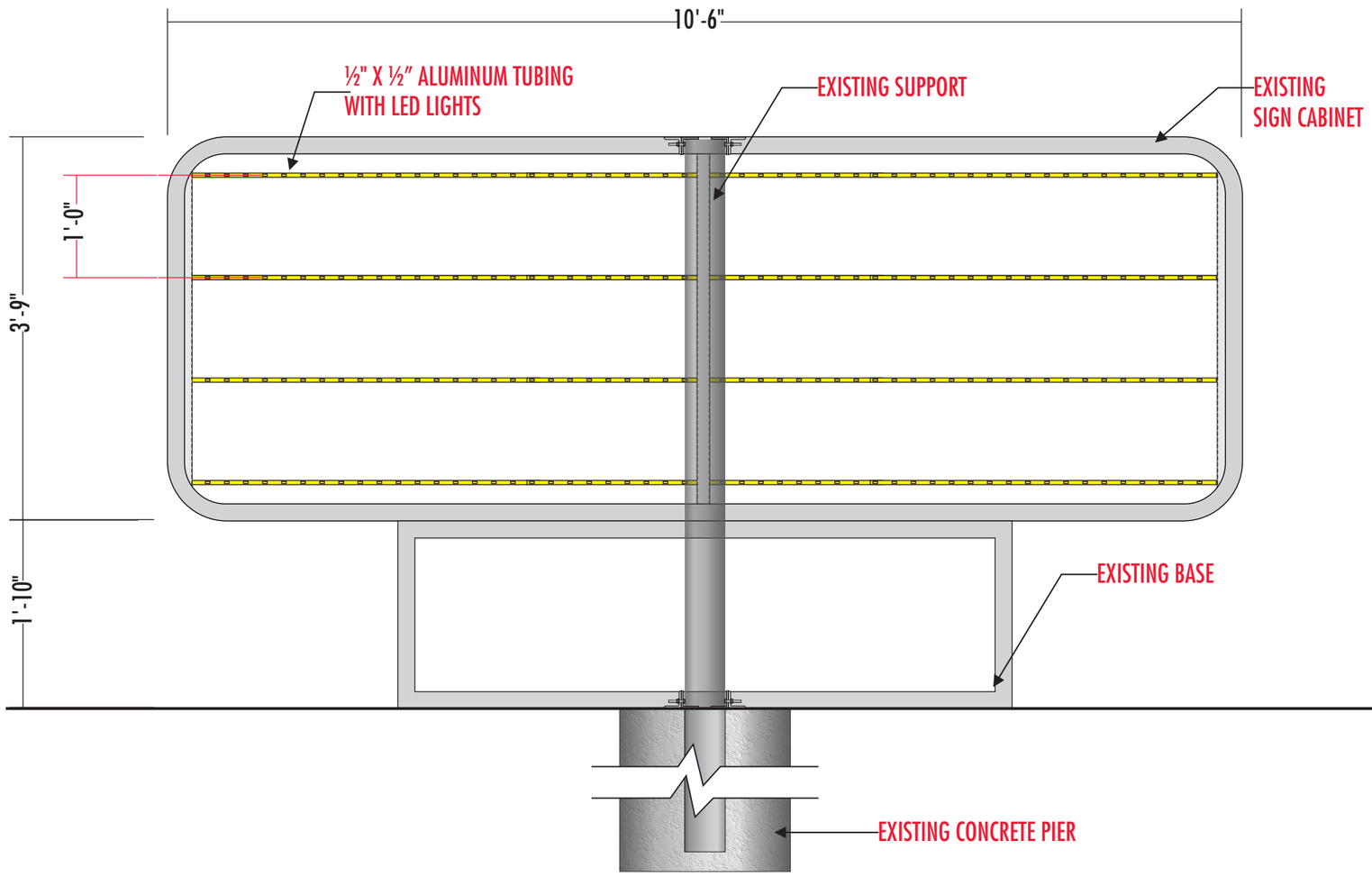

FRONT ELEVATION
SCALE: 3/4" = 1'-0"

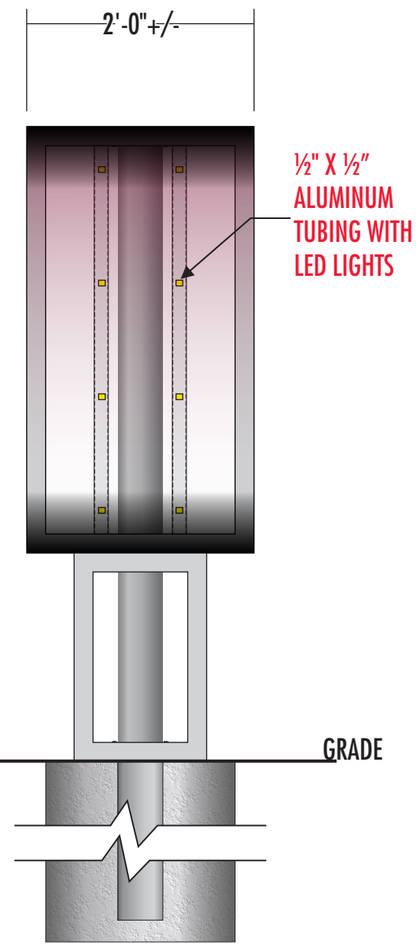

END VIEW

CLIENT APPROVAL SIGNED: DATE:
LANDLORD APPROVAL SIGNED: DATE:
SALES APPROVAL

National Signs
2611 EL CAMINO
HOUSTON, TEXAS 77054
TEL: 713.863.0600 • FAX: 713.863.7585
www.NationalSigns.com

PROJECT: E.M. MAXWELL ADULT CTR
LOCATION: 1201 CENTER STREET
CITY/STATE: DEER PARK, TX ...
SALES REP: REBECCA BRUCE
DATE : 11.30.18
DRAWN BY: JORGE QUALITY RVIEW
DRAWING#: NS18 30315 FABRICATION READY

COPYRIGHT

THIS RENDERING IS THE PROPERTY OF NATIONAL SIGNS, LLC. ANY REPRODUCTION OR EXHIBITION OF THIS DRAWING IS STRICTLY PROHIBITED. ©2018 NATIONAL SIGNS, LLC. THIS RENDERING MAY NOT BE USED TO CONSTRUCT AND/OR BUILD WHAT IS DEPICTED HEREIN WITHOUT THE EXPRESS WRITTEN CONSENT OF NATIONAL SIGNS, LLC.

120 VOLT ELECTRICAL SERVICE

	SIGN	LED DISPLAY
ELECTRICAL LOAD		
20 AMP CIRCUIT(S)		

CLIENT TO PROVIDE ALL PRIMARY ELECTRICAL SERVI TO THE SIGN UNLESS OTHERWISE SPECIF

REVISIONS

UL INSTALLATION REQUIREMENTS

THIS SIGN IS INTENDED TO BE INSTALLED IN ACCORDANCE WITH THE REQUIREMENTS OF ARTICLE 600 OF THE NATIONAL ELECTRICAL CODE AND/OR OTHER APPLICABLE LOCAL CODES. THIS INCLUDES PROPER GROUNDING AND BONDING OF THE SIGN.

NationalSigns

BUSINESS AGREEMENT

AN AGREEMENT BETWEEN NATIONAL SIGNS, LLC (SELLER) AND: City of Deer Park **(BUYER)**

PROJECT NAME: DEER PARK / 1201 CENTER ST / MON

AUTHORIZED REPRESENTATIVE: CHARLIE SANDBERG **PHONE:** O:281-478-2050 D:281-478-2054 **EMAIL:** CSANDBERG@DEERPARKTX.ORG

BILLING ADDRESS: 710 E SAN AUGUSTINE I DEER PARK TX 77536 **FAX:**

JOB LOCATION: 1201 CENTER ST I DEER PARK TX

NSL ACCOUNT EXECUTIVE: REBECCA BRUCE

WE HEREBY SUBMIT SPECIFICATIONS AND INVESTMENT AMOUNT FOR:	INVESTMENT:
ST. A OPTION 1- REMOVE AND DISPOSE OF TWO (2) EXISTING PAN FACES AND EXISTING LIGHTING FROM ONE (1) EXISTING DOUBLE FACED MONUMENT. CLEAN AND REPAINT CABINET, BASE AND FLAT CUT OUT ADDRESS. RETROFIT SIGN WITH NEW WHITE LED. MANUFACTURE AND INSTALL TWO (2) 3'-9" X 10'-6" X .150" POLYCARBONATE VACUUM FORMED FACES TO ONE (1) EXISTING DOUBLE FACED, INTERNALLY ILLUMINATED MONUMENT SIGN.	$ 11,300.00
LOYALTY DISCOUNT	($ 1,130.00)
BUYBOARD DISCOUNT	($ 565.00)

Permits, Engineering, Lane Closures and related fees, if any, are additional, and billed at cost plus a $495 procurement fee.

_____
Client Initials

ALL WORK TO COMPLY WITH NSL DRAWING #: NS 18 30315 **REV:** **DATED:** 11.30.2018

We propose hereby to furnish material and labor in accordance with above Specifications for:

INVESTMENT: $ 9,605.00 **SALES TAX:** $ 0.00 **TOTAL:** $ 9,605.00 **DEPOSIT:** $ 4,802.50

Investment amount to remain in effect for 30 days from the date this agreement was issued. After 30 days, the Investment amount is subject to change based on market conditions.

Deposit due upon acceptance of this agreement with balance due upon completion in accordance with the General Terms and Conditions hereof.

Drawing #: NS 18 30315 **Rev:** **CLIENT INITIALS:**

Job Name: DEER PARK / 1201 CENTER ST / M Date Created: 12/19/2018

2611 El Camino St. • Houston Texas, 77054 • Tel 713-863-0600 • 800-659-6285 • Fax 713-863-7585 • www.nationalsigns.com

National Signs

Client agrees that the entire investment amount and remaining balance is due and payable upon completion of project. If National Signs does not receive full payment within 30 days from invoice, National Signs has the authority to deem the Warranty NULL & VOID and forfeited by the client. *FURTHER, NATIONAL SIGNS RESERVES THE RIGHT TO INVOICE AND COLLECT FOR COMPLETED MANUFACTURING PRIOR TO INSTALLATION.* ***Investment amount in this agreement includes a discount for payment (in full or in part) by cash, check or electronic funds transfer. Discounted pricing does not apply for credit card payments.***

General Terms and Conditions

1. **ELECTRICAL CONNECTIONS.** *Post-installation* visit(s) related to electrical connectivity will be at the Buyer's specific request and will be conducted at the Buyer's expense. Moreover, it is understood and agreed that Buyer is to furnish all primary electrical service required, connection thereof, and / or switches or other controls at Buyer's own expense. It is understood that final hookup will be completed at the time of installation provided that the circuit(s) is ready. In the event that the connection is not yet available, additional charges related to a return visit for the purpose of completing the hookup will ensue. Buyer further acknowledges that Seller is entitled to payment as per this agreement upon completion of services and/or installation regardless of electrification or connection status and such payment will in no way be withheld or otherwise detained due to a lack of power or other connection.
2. **TAXES.** Unless otherwise noted, prices on the specified products are exclusive of all city, state, and federal excise taxes, including, without limitation, taxes on manufacture, sales, receipts, gross income, occupation, use and similar taxes. Wherever applicable, any tax or taxes will be added to the invoice as a separate charge to be paid by the Buyer.
3. **DELIVERY.** Unless otherwise noted, Buyer shall pay freight charges by Seller's regular method of shipment, i.e., via rail, freight forwarders, or motor carrier to any one destination in the United States, Seller reserving the right to control the routing. When any other than Seller's regular method of shipment is used, terms shall be F.O.B. Seller's premises. Special handling charges by carrier shall be paid by Buyer. All shipments are insured at the Buyer's expense and made at the Buyer's risk. Identification of the goods to the contract shall occur as each shipment is placed in the hands of the carrier.
4. **DELAYS.** Seller will not be liable for any delay in the performance of orders or contracts, or in the delivery or shipment of goods, or for any damages suffered by Buyer by reason of such delay.
5. **CONDITIONS.** All orders or contracts are accepted with the understanding that they are subject to Seller's ability to obtain the necessary raw materials, and all orders or contracts as well as shipments applicable thereto are subject to Seller's current manufacturing schedules, and government regulations, orders, directives, and restrictions that may be in effect from time to time.
6. **ENGINEERING AND PERMITTING.** Specifications and Investment amount are based on the most current engineering and permitting information available at the time of this Agreement. Should modifications be necessary due to updated engineering or permitting studies or requirements, Seller shall have the right pass on any additional costs within the scope of this Agreement.
7. **NONCONFORMITY.** All materials made by Seller are to be inspected before shipment, and should any of such materials prove defective due to faults in manufacture, or fail to meet the written specifications accepted by Seller, Buyer shall not return the goods, but shall notify Seller immediately, stating full particulars in support of his claim, and Seller will either replace goods upon return of the defective or unsatisfactory material or adjust the matter fairly and promptly, but under no circumstances shall Seller be liable for consequential or other damages, losses, or expenses in connection with or by reason of the use of or inability to use materials purchased for any purpose.
8. **CANCELLATION.** An order once placed with and accepted by Seller can be canceled only with Seller's consent and upon terms that will indemnify against loss by Seller.
9. **INDEMNITY BY BUYER.** Buyer shall hold Seller harmless from, and release and not make claim or suit against Seller because of, any suits, claims, losses, or other liability made against, or suffered by, Seller arising from any claim of, or infringement of, patent, copyright, trademark, or other proprietary right, at common law, or claim of unfair trade or of unfair competition, resulting from, or occasioned by, Buyer's use, possession, sale, or delivery of the merchandise sold to Buyer by Seller. Buyer will further indemnify, hold harmless, and defend Seller from all liability for loss, damage, or injury to person or property in any manner arising out of or incident to the performance of this Agreement. Without limitation of the foregoing, Buyer agrees to indemnify and hold the Seller harmless from and against any liability for loss, damage, or injury to person or property in any manner arising out of the electrical connections and / or switches supplied by Buyer hereunder and from drilling for piers and / or foundations, including but not limited to damages to landscaping, sewer lines, gas lines or any other underground obstacle. The indemnity of Buyer herein shall apply regardless of any cause or any fault or negligence of Seller, Seller's agents, successors, assigns, employees, or otherwise.
10. **CLAIMS.** Claims for defective merchandise, shortages, delays, or failures in shipment or delivery, or for any other cause, shall be deemed waived and released by Buyer, unless made in writing within one year after installation.
11. **SELLER'S RIGHT OF POSSESSION.** Until full and final payment is received by Seller, all merchandise delivered by Seller to Buyer shall be the sole property of the Seller and shall not, by reason of any connection to realty, be deemed to be any fixture or appurtenance to realty and shall be severable therefrom. Seller shall have the right, in addition to all others it may possess, at any time, for credit reasons or because of Buyer's default or defaults, to withhold shipments, in whole or in part, to recall goods in transit and retake same, and to repossess and remove all merchandise delivered to Buyer, with out the necessity of taking any other proceedings. Buyer consents that all such merchandise may be so recalled, retaken, or repossessed. Buyer specifically acknowledges and agrees that all such merchandise is and shall remain the Seller's absolute property until full and final payment is received by Seller. The foregoing shall not be construed as limiting, in any manner, any of the rights or remedies available to Seller because of any default of Buyer under the Uniform Commercial Code as in force and effect in the State of Texas or any other applicable jurisdiction on the date of the signing of this Agreement.
12. **WARRANTY.** Subject to and contingent upon the full and timely performance by Buyer of all terms and conditions hereof, including full and timely payment of all invoices, Seller guarantees all original work performed under this Agreement against defective materials, parts and workmanship for a period of **five (5) years** from the date of installation. Seller's obligation with respect to such products or parts shall be limited to replacement or repair F.O.B. Houston, Texas, and in no event shall Seller be liable for consequential or special damages, or for transportation, installation, adjustment, or other expenses which may arise in connection with such products or parts. NO EXPRESS WARRANTIES AND NO IMPLIED WARRANTIES WHETHER OF MERCHANTABILITY OR FITNESS FOR ANY PARTICULAR USE, OR OTHERWISE (EXCEPT AS TO TITLE), OTHER THAN THOSE EXPRESSLY SET FORTH ABOVE WHICH ARE MADE EXPRESSLY IN LIEU OF ALL OTHER WARRANTIES, SHALL APPLY TO PRODUCTS SOLD BY SELLER, AND NO WAIVER, ALTERATION, OR MODIFICATION OF THE FOREGOING CONDITIONS SHALL BE VALID UNLESS MADE IN WRITING AND SIGNED BY AN EXECUTIVE OFFICER OF SELLER. SELLER SHALL NOT BE LIABLE FOR ANY LOSS OR DAMAGE, DIRECTLY OR INDIRECTLY, ARISING FROM THE USE OF SUCH MERCHANDISE OR FOR CONSEQUENTIAL DAMAGES.
13. **TERMINATION UPON DEFAULT.** Upon the happening of any one or more of the following events, Seller shall forthwith have the unrestricted right to cancel and terminate this Agreement without cost or liability to the Seller: (1) Buyer's insolvency or inability to meet obligations as they become due; (2) filing of voluntary or involuntary petition of bankruptcy by or against Buyer; (3) institution of legal proceedings against Buyer by creditors or stockholders; (4) appointment of a receiver for Buyer by any court of competent jurisdiction; or (5) the breach by Buyer or any of the terms of this Agreement..
14. **ACCEPTANCE.** This is not a firm offer and may be changed or revoked at any time before execution. Acceptance of this offer is expressly limited to the exact terms contained herein and any attempt to alter or omit any of such terms shall be deemed a rejection and a counteroffer. These terms and conditions shall supersede any provisions, terms, and conditions contained on any confirmation order, or other writing Buyer may give or receive, and the rights of the parties shall be governed exclusively by the provisions, terms, and conditions hereof. Seller makes no representations or warranties concerning this order except such as are expressly contained herein, and this Agreement may not be changed or modified orally.

2611 El Camino St. • Houston Texas, 77054 • Tel 713-863-0600 • 800-659-6285 • Fax 713-863-7585 • www.nationalsigns.com

National Signs

15. **SETOFF.** Any claims of Buyer against Seller relating to this Agreement shall be subject to setoff or counterclaim of Seller arising out of this or any other agreement with Buyer.
16. **MARKETING APPROVAL.** Buyer agrees to allow Seller to produce and use photographs, drawings, descriptions or likenesses of product and their location in any marketing, advertising or promotional materials in all media.
17. **LIMITATION OF REMEDY.** Seller shall not be liable in any case for incidental or consequential damages of any nature. It is acknowledged that the items sold are not so unique or the circumstances such that either party shall be entitled to the remedy of specific performance.
18. **GOVERNING LAW.** This Agreement is made in Houston, Harris County, Texas, and shall be governed by the laws of the State of Texas. Buyer consents to the jurisdiction of any state or federal court sitting in Houston, Harris County, Texas, and the parties agree that Houston, Harris County, Texas shall be the sole and exclusive venue for any litigation brought with respect to matters arising under or relating to this Agreement and that venue shall be proper in any such court to the exclusion of the court in any other county or state. The Buyer further agrees that such designated forum is proper and convenient. THE PARTIES HEREBY WAIVE THEIR RIGHT TO TRIAL BY JURY WITH RESPECT TO ANY DISPUTE ARISING UNDER THIS AGREEMENT.
19. **ENTIRE AGREEMENT.** This Agreement and related attachments and drawings constitute the sole and entire agreement between the parties hereto with regard to the subject matter hereof. No course of prior dealings between the parties and no usage of the trade shall be relevant or admissible to supplement, explain, or vary any of the terms of this Agreement. Acceptance of, or acquiescence in, a course of performance rendered under this or any prior agreement shall not be relevant or admissible to determine the meaning of this Agreement even though the accepting or acquiescing party has knowledge of the nature of the performance and an opportunity to make objection. No other representations, understandings, or agreements have been made or relied upon in the making of this Agreement other than those specifically set forth herein. This Agreement can be modified only by an instrument signed by the parties or their duly authorized agents.
20. **SUPPLEMENTARY INFORMATION.** Any specifications, drawings, notes, instructions, engineering notices, or technical data specifically referred to in this Agreement shall be deemed to be incorporated herein by reference as if fully set forth.
21. **LATE PAYMENT.** Any balances not paid within 30 days from invoice are subject to a 1% monthly finance charge until paid.
22. **ATTORNEY'S FEES.** Should the services of an attorney become necessary in connection with enforcing the provisions of this Agreement, the Buyer agrees to pay a reasonable attorney's fee together with all costs and expenses incident to the enforcement of its provisions.
23. **FURTHER ASSURANCES.** Each party to this Agreement agrees to perform all further acts and to execute and deliver all further documents, which may be reasonably necessary to carry out the provisions of this Agreement.
24. **SEVERABILITY.** In the event that any of the provisions, or portions thereof, of this Agreement are held to be unenforceable or invalid by any court of competent jurisdiction, the validity and enforceability of the remaining provisions, or portions thereof, will not be affected, and in lieu of such unenforceable provision there shall be added automatically as part of this Agreement a provision as similar in terms as may be valid and enforceable.
25. **COUNTERPARTS; FACSIMILE SIGNATURE.** This Agreement may be executed in any number of counterparts, which taken together shall constitute one and the same instrument and each of which shall be considered an original for all purposes. Each party agrees to accept the facsimile signature of the other party to this Agreement as evidence of the execution and delivery of this Agreement. Such facsimile signature will be deemed to be binding upon the party sending such facsimile signature.

ACCEPTANCE OF PROPOSAL: The above investment amount, specifications and conditions are satisfactory and are hereby accepted. You are authorized to perform the work as specified. Payment will be made as outlined above.

NOTE: AGREEMENT WILL NOT BECOME EFFECTIVE UNTIL SUCH TIME AS IT IS AUTHORIZED BY SELLER BELOW. AUTHORIZATION WILL NOT OCCUR UNTIL PRODUCTION REQUIREMENTS ARE MET. ANY PRODUCTION LEADTIMES WILL NOT BEGIN UNTIL DATE OF AUTHORIZATION BY SELLER.

CHARLIE SANDBERG	**Date**	**National Signs, LLC Authorized Signature**	**Date**

National Signs, LLC License #18011

Regulated by the Texas Department of Licensing and Regulation P.O. Box 12151 Austin, Texas 78711

Telephone: (512) 463-6599 Toll-Free (In Texas): (800) 803-9202 Online-http://www.license.state.tx.us/Complaints

City of Deer Park

710 E SAN AUGUSTINE
DEER PARK, TX 77536

Legislation Details (With Text)

File #:	RPT 19-007	**Version:**	1	**Name:**	
Type:	Report			**Status:**	Agenda Ready
File created:	1/23/2019			**In control:**	Deer Park Community Development Corporation
On agenda:	1/28/2019			**Final action:**	
Title:	Discussion of issues relating to the current status of DPCDC projects.				
Sponsors:					
Indexes:					
Code sections:					
Attachments:	Deer Park CDC Project Update - 1-28-19				

Date	Ver.	Action By	Action	Result
1/28/2019	1	Deer Park Community Development Corporation		

Discussion of issues relating to the current status of DPCDC projects.

Summary:

A brief report will be given at the meeting summarizing the current status of the DPCDC projects.

Fiscal/Budgetary Impact:

n/a

Receive the report.

powered by Legistar™

Deer Park CDC Project Update

October 2018 – December 2018

Dow Park Pavilion Project - This project was identified as one of seven approved projects in the 2015 Type B dedicated sales tax election that was voted for by Deer Park residents. The City entered into a contract with Halff Associates as the architect and South Pool and Spa as the general contractor. The project is funded with $1.5 million from Type B sales tax. The new restroom buildings were installed and progress continues on the pavilion structures. The City terminated the contract with the previous general contractor and awarded a contract for the completion of the project to Mills Construction. The project was completed in September of 2018.

- Acceptance of completion of and retainage release for DPCDC Dow Park Pavilion project.
- Ribbon cutting and dedication for the Dow Park Pavilion held on September 27th.

Maxwell Adult Center - This project was one of seven approved projects in the 2015 Type B dedicated sales tax election that was voted for by Deer Park residents. The project is funded with $2 million from Type B sales tax. The City of Deer Park selected Halff Associates as the architect and Frost Construction as the general contractor for the project. Construction began in November of 2017. Demo of the interior and site preparation for the new addition has been completed. The project is complete and building is currently in use with minimal punch list items remaining.

- Project is complete with only minor punch list items.
- Parks and Recreation Department hosted pre-opening tours on November 20th and 21st.
- December 19, 2018 marked the first day of Maxwell regular operations post renovations.
- Retainage will be paid out to Frost Construction and soon to be submitted to City Council for the project to be closed-out.

Girls Softball Complex - This project was identified as one of seven approved projects in the 2015 Type B dedicated sales tax election that was voted for by Deer Park residents. This project is funded by $3 million from Type B sales tax. The City selected Tandem Services as the general contractor and Halff Associates as the architect for this project. Construction began in January 2018. The project is on schedule to be completed by the end of 2018.

- Project is roughly 90% complete.
- Meeting on Bi-weekly basis with Tandem Services, City staff, and Halff.
- Several contingency modifications have been executed for the project.
- Concession and restroom building is roughly 85% completed.
- Turf has been installed and is being cared for.
- Batting cages have been installed and completed.
- Hydramulching around complex has begun.
- Work continues to fine grade the skinned areas of the fields.
- Irrigation has been installed and inspected.

- Scheduled completion of the facility is February 2019 with usage to begin once grass playing surfaced is determined to be safe for play.
- Due to the difficult project components, scaling down the project, re-scoping the project several times the cost for the bleachers was inadvertently left out of the request for additional funding before the second round of bids. Staff will be requesting funding from City sources for this oversight.

New Soccer Complex - This project is another one of the seven approved projects in the 2015 Type B dedicated sales tax election. The project is being funded with $4 million from Type B sales tax. The City of Deer Park selected Halff Associates as the architect and Tandem Services as the general contractor. Construction began in January 2018. The project is on schedule and is expected to be completed in early 2019.

- Project is roughly 85% complete.
- Meeting on Bi-weekly basis with Tandem Services, City staff, and Halff.
- Concession and restroom building is roughly 85% completed.
- Center Point has installed the electrical meter for the facility.
- Irrigation has been installed and is waiting for inspection.
- Parking lot and driveway for facility has been completed.
- Field sprigging will begin once irrigation is approved.
- Fields are expected to take several months for turf to establish.
- 90% of the flatwork has been completed around the site.

Community Center – This project is another one of the seven approved projects in the 2015 Type B dedicated sales tax election. The project is being funded with $6 million from Type B sales tax. This project is currently under staff review and discussion.

- City of Deer Park has hired Brinkley, Sargent, Wigington has architectural firm for consulting and design of the potential renovations and expansion of the Deer Park Community Center.
- City staff visited 5 Houston area recreation centers to begin researching facility design and trends.
    - December 13 – Eagle Pointe, Imperial Recreation Center, Pearland Recreation Center
    - December 20 – C.K. Ray Recreation Center and West University Place Recreation Center

Hike and Bike Trails - This project is another one of the seven approved projects in the 2015 Type B dedicated sales tax election. The project is being funded with $500,000 from Type B sales tax.

- Limited discussions with staff have taken place.
- City staff met with Bruditt Consultants for potential design of the Hike and Bike Trails comprehensive plan.

Spencerview Athletic Complex - This project is another one of the seven approved projects in the 2015 Type B dedicated sales tax election. The project is being funded with $3 million from Type B sales tax.

- This project was completed in August of 2017 and is currently in use.

City of Deer Park

710 E SAN AUGUSTINE
DEER PARK, TX 77536

Legislation Details (With Text)

File #:	RPT 19-008	**Version:**	1	**Name:**	
Type:	Report			**Status:**	Agenda Ready
File created:	1/23/2019			**In control:**	Deer Park Community Development Corporation
On agenda:	1/28/2019			**Final action:**	
Title:	Consideration of and possible action on the quarterly report for the period of October 1, 2018 - December 31, 2018.				
Sponsors:	City Manager's Office				
Indexes:					
Code sections:					
Attachments:	CDC Quarterly Report 2018				

Date	Ver.	Action By	Action	Result
1/28/2019	1	Deer Park Community Development Corporation		

Consideration of and possible action on the quarterly report for the period of October 1, 2018 - December 31, 2018.

Summary:

Section 6.1 of the Corporation's bylaws states that the Board shall prepare a quarterly activity report, detailing the projects and work accomplished during the previous quarter. This report shall be reviewed by the Board by the end of the month following the end of each quarter and then submitted to City Council immediately thereafter.

The attached report for the period of October 1, 2018 - December 31, 2018has been prepared for the Board's consideration and possible action.

Fiscal/Budgetary Impact:

N/A

Approve the quarterly report for the period of October 1, 2018 - December 31, 2018 and authorize submission to the City Council.

powered by Legistar™

Quarterly Report: October 1, 2018 – December 31, 2018

Meetings Conducted and Activities

October 2 - Maxwell Construction meeting – Frost/BSW/ City Staff

October 11 – Irrigation inspection at Maxwell Center – Frost/City Staff/Halff

October 11 – Irrigation inspection at Girls Softball – Frost/City Staff/Halff

October 16 -Approval of purchase for furniture for the Maxwell Adult Center - CC/City Staff

October 16 – City Council appoints three (3) CDC members – CC/City Staff

October 22 – Meeting to discuss Maxwell Center opening – City Staff

October 22 – Deer Park Community Development Corporation regular board meeting – DPCDC/City Staff

October 23 – Maxwell Center Walk through and punch list – Frost/BSW/Halff/City Staff

November 6 – Maxwell Center walk through and punch list – Frost/BSW/Halff/City Staff

November 6 – Acceptance of DPCDC quarterly reports for April – June and July – September – CC/City Staff

November 6 – Authorization for the utilization of unencumbered project funds for security camera equipment at the Maxwell Center – CC/ City Staff

November 6 - Authorization for the utilization of unencumbered project funds to amend Halff architectural services contract for extended days at the Maxwell Center – CC/ City Staff

November 6 – Authorization to negotiate professional services agreement with Burditt Consultants for the comprehensive Hike and Bike Trail plan– CC/ City Staff

November 6 – Removal of member from the DPCDC and appointment of replacement member – CC/ City Staff

November 8 – Conference call to discuss potential litigation – City attorney/City Staff

November 12 – Meeting to discuss items related to Deer Park Girls Softball Project – City Staff

November 14 – Maxwell walk through tour – City Staff/City Council members

November 19 – Meeting to discuss items related to Maxwell Center – City Staff

November 19 – Maxwell walk through tour – City Staff/City Council members

November 20 – General public Maxwell walk through tour – City Staff/ Deer Park citizens

November 21 – General public Maxwell walk through tour – City Staff/Deer Park citizens

November 26 – Maxwell punch list discussion – City Staff/Frost

November 27 – Maxwell tour items meeting – City Staff

November 28– Deer Park Soccer Complex construction meeting – City Staff/Tandem Services/Halff

November 28 – Deer Park Girls Softball construction meeting – City Staff/Tandem Services/Halff

December 5 – Maxwell Center move in meeting – City Staff

December 10 – Deer Park Soccer Complex project discussion meeting – City Staff

December 12– Deer Park Soccer Complex construction meeting – City Staff/Tandem Services/Halff

December 12 – Deer Park Girls Softball construction meeting – City Staff/Tandem Services/Halff

December 13 – Houston area recreational facility tours – City Staff

December 18 – Authorization to reduce retainage from 5% - 2% on the Deer Park Soccer project for Tandem Services – CC/City Staff

December 19 – Maxwell Operations opening day – City Staff

December 19 – Pool assessment of the Dow Park Pool – City Staff/ XXX

December 20 – Houston area recreational facility tours – City Staff

Financial

Debt Issuance

- $9,450,000 Certificates of Obligation, Series 2016 issued February 16, 2016 through a private placement to Wells Fargo Bank via a competitive bidding process
- $2,700,000 Certificates of Obligation, Series 2017 issued February 14, 2017 through a private placement to First National Bank Texas via a competitive bidding process
- Note: the $5,850,000 authorized for the Community Center Expansion/Renovation has not yet been issued pending a decision on how to proceed with the project
- In an agreement between the City of Deer Park and the DPCDC, the City agreed to issue and sell certificates and the DPCDC agreed to make payments to the City in amounts sufficient to pay the principal of and interest on the certificates

Deer Park Community Development Corporation (Fund 85)

This fund records the sales tax revenues, operating expenditures, including bond issuance costs, and debt service payments.

Revenues:

- Sales & Use Tax Revenues:

  1Q (12/31/18) = $259,892.45

  Total Fiscal YTD = $259,892.45

- Investment Revenue:

  1Q (12/31/18) = $1,630.03

  Total Fiscal YTD = $1,630.03

- ***Total Fiscal YTD Revenues as of 12/31/18: $261,522.48 (preliminary and unaudited)***

Expenditures:

- Pay-As-You-Go – Dow Park:

  1Q (12/31/18) = $0.00

  Total Fiscal YTD = $0.00

- ***Total Fiscal YTD Expenditures as of 12/31/18: $0.00 (preliminary and unaudited)***

Bond Fund – Certificates of Obligation (Fund 23)

This fund records the bond proceeds of the $9,450,000 Certificates of Obligation, Series 2016 and the $2,700,000 Certificates of Obligation, Series 2017 and all related capital project expenditures, including pay-as-you-go funding.

Revenues:

- Intergovernmental Revenue *(Pay-As-You-Go Funding)*:

  1Q (12/31/18) = $0.00

  Total Fiscal YTD = $0.00

- Investment Revenue:

  1Q (12/31/18 = $11,816.75

  Total Fiscal YTD = $11,816.75

- ***Total Fiscal YTD Revenues as of 12/31/18: $11,816.75 (preliminary and unaudited)***

Expenditures:

- Buildings:

  1Q (12/31/18) = $843,770.15

- Maxwell Center = $150,894.95
- Girls Softball = $276,936.46
- Soccer Fields = $415,938.74

Total Fiscal YTD = $843,770.15

- Improvements Other Than Buildings:

  1Q (12/31/18) = $316.47

  - Dow Park = $316.47

  Total Fiscal YTD = $316.47

- Machinery & Equipment:

  1Q (12/31/18) = $6,665.79

  - Maxwell Center = $6,665.79

  Total Fiscal YTD = $6,665.79

- Consulting Architect Fee

  1Q (12/31/18) = $20,760.01

  - Maxwell Center = $15,736.35
  - Girls Softball = $597.75
  - Soccer Fields = $2,528.39
  - Community Center = $1,897.52

  Total Fiscal YTD = $20,760.01

- ***Total Fiscal YTD Expenditures as of 12/30/18: $871,512.42 (preliminary and unaudited)***

Additional Funding

Certain project costs have or are expected to exceed the total amount appropriated by the authorized Type B funding. In response, the City Council has approved several budget amendments to provide the additional resources to fund these projects. The following reports the total amounts approved for the respective projects:

- Dow Park = $231,119.00
- Girls Softball = $449,631.00
- Soccer Fields = $107,197.00

Total Budget Amendments = $787,947.00

City of Deer Park

710 E SAN AUGUSTINE
DEER PARK, TX 77536

Legislation Details (With Text)

File #:	RPT 19-009	**Version:**	1	**Name:**	
Type:	Report			**Status:**	Agenda Ready
File created:	1/23/2019			**In control:**	Deer Park Community Development Corporation
On agenda:	1/28/2019			**Final action:**	
Title:	Consideration of and possible action on the DPCDC's annual report to the State Comptroller for Fiscal Year 2018.				
Sponsors:	City Manager's Office, Finance, Parks & Recreation				
Indexes:					
Code sections:					
Attachments:	Annual 4B_EDC Report to Texas Comptroller				

Date	Ver.	Action By	Action	Result
1/28/2019	1	Deer Park Community Development Corporation		

Consideration of and possible action on the DPCDC's annual report to the State Comptroller for Fiscal Year 2018.

Summary:

Section 502.151 of the Texas Local Government Code requires the corporation to submit an annual report to the State Comptroller's Office. This requirement has been in place for the past 21 years. Each even-numbered year, the information is compiled and reported to legislators and taxpayers to inform them how Type A and Type B EDCs are using tax dollars. The report is submitted online and is due on January 31, 2019.

Fiscal/Budgetary Impact:

N/A

Approve annual report to the State Comptroller for Fiscal Year 2018.

powered by Legistar™

Economic Development Corporation Report

City: Deer Park / Fiscal Year: 2018 / Corporation Type: 4B

Corporation's information

Corporation Name	Deer Park Community Development Corporation
Secretary of State File / Charter Number	
Contact Person	James Stokes City Manager
Address	710 E. San Augustine Deer Park 77536
Contact numbers	Phone: 281-478-7245 Fax: 281-478-7218
Corporation's fiscal year	From Oct 2017 To Sep 2018

Corporation's primary economic development objective(s)

Sports Facilities/Recreation

$ Corporation's financial information

Corporation's fiscal year ending unrestricted fund balance or unrestricted retaining earnings: $3,779,572.00

Corporation's total revenues during the fiscal year

Sales Tax Revenue	$3,314,040.00
State/Federal Grants and Matching Contributions	$0.00
Rental/Lease/User Fees Income	$0.00
Bond Proceeds/Loans Obtained	$0.00
Other Revenues	$1,498.00
TOTAL FISCAL YEAR REVENUES	$3,315,538.00

Corporation's total expenditures during the fiscal year in each of the following categories

Personnel	$0.00
Administration	$0.00
Marketing and Promotion	$0.00
Direct Business Incentives	$0.00
Job Training	$0.00
Debt Service	$2,024,358.00
Capital Costs	$751,480.00
Affordable Housing	$0.00
Payments to Taxing Units	$0.00
Other Expenditures	$2,000.00
TOTAL FISCAL YEAR EXPENDITURES	$2,777,838.00

Corporation's capital assets

None

Person Completing this Form

Name: Gary Jackson, Assistant City Manager

Phone: 281-478-7260

City of Deer Park

710 E SAN AUGUSTINE
DEER PARK, TX 77536

Legislation Details (With Text)

File #:	DIS 19-011	**Version:**	1	**Name:**	
Type:	Discussion			**Status:**	Agenda Ready
File created:	1/23/2019			**In control:**	Deer Park Community Development Corporation
On agenda:	1/28/2019			**Final action:**	
Title:	Announcement of date and time of the next DPCDC regular board meeting: April 22, 2019 at 5:30 pm.				
Sponsors:					
Indexes:					
Code sections:					
Attachments:					

Date	Ver.	Action By	Action	Result
1/28/2019	1	Deer Park Community Development Corporation		

Announcement of date and time of the next DPCDC regular board meeting: April 22, 2019 at 5:30 pm.

Summary:

Section 2.4 of the bylaws state that regular meetings of the Board of Directors of the Deer Park Community Development Corporation shall be held on the 4th Monday of each quarter (October, January, April, July), beginning at 5:30 pm and such meetings shall be held at the Deer Park City Hall, 710 E. San Augustine, Deer Park, TX, unless otherwise determined by resolution of the Board. Therefore, the next DPCDC regular meeting will be held on April 22, 2019 at 5:30 pm.

Fiscal/Budgetary Impact:

n/a

Acknowledge the date and time of the next DPCDC regular board meeting.

powered by Legistar™