AT&T Mobility
11930 Airline Dr.
Room 210
Houston, TX 77037

November 5, 2018

Deer Park City Council
Larry Brotherton/Chief Building Official
710 E. San Augustine
Deer Park, Texas 77536

RE: Specific Use Permit

Dear Deer Park City Council,

AT&T is proposing a new constructed 180' Self Support telecommunications tower located at 6911 HWY 225 in Deer Park, Texas. The legal description is Tract 10C-2, Abstract 646, George Ross Survey in Harris County. This site would replace the existing cell site that we are collocated on .26 miles to the south east. The fees, costs, and contractual provisions required by the tower owner for us to remain collocating on the existing structure are unreasonable. AT&T needs to reduce our monthly rent expenditures at this location, thus a relocation is the most appropriate cost-effective move.

In compliance with the city's zoning use of the proposed location AT&T is in the area that is zoned for light industrial and refinery. AT&T has been granted a letter from the landlord for permission to build a tower on the land. AT&T has also obtained an executed Option and Land Lease, that grants AT&T (tenant) approximately 3,600 sq. ft of the leased site.

For AT&T to continue to provide continued coverage to our subscribers and constituents in this area AT&T has provided this information with the full intent of meeting the spirit and letter of the code for which this application is being submitted. AT&T is supplying all relevant information for this project to be reviewed by the City of Deer Park.

Thank you,

JoyLee Owings

JoyLee Owings
Sr Real Estate & Construction Mgr

AT&T Site Number HX0713, FA 14520886

AQUA SOLUTIONS, INC.

P.O. Box 70. Deer Park, TX 77536. Ph(800)256-2586 Fax(281)479-2790
Visit our website at www.aquasolutions.org

DATE 10/08/18 **TOTAL PAGES:** 1

TO: **City of Deer Park-City Council**

FROM: Chris Bedford
Aqua Solutions, Inc.
PH: 281-479-2569

RE: **Specific Use Permit**

Mastec and New Cingular Wireless have my permission to request a Specific Use Permit for 3,600 square feet on George Ross Survey, A-646 of Harris County, Texas

Thanks,

Chris Bedford

CITY OF DEER PARK

Specific Use Permit

LN- 002330 -2018

PERMIT #: **LN- 002330 -2018** **PROJECT:**

ISSUED DATE: EXPIRATION DATE :

PROJECT ADDRESS: **6911 1/2 SH 225 W**

OWNER NAME:	Aqua Solutions	CONTRACTOR:	AT&T
ADDRESS:	6915 Highway 225	ADDRESS:	6911 1/2 Hwy 225
CITY:	Deer Park	CITY:	DEER PARK
STATE :	TX	STATE :	TX
ZIP:	77536	ZIP:	77536
		PHONE:	

PROJECT DETAILS

PROPOSED USE: SQ FT: 0

DESCRIPTION: Specific Use Permit For A Cell Tower VALUATION : $ 0.00

PERMIT FEES

TOTAL FEES : $ 1,000.00 PAID: $ 1,000.00 BALANCE: $ 0.00

ALL PERMITS MUST BE POSTED ON THE JOBSITE AND VISIBLE FROM THE STREET

NOTICE

THIS PERMIT BECOMES NULL AND VOID IF WORK OR CONSTRUCTION AUTHORIZED IS NOT COMMENCED WITHIN 6 MONTHS, OR IF CONSTRUCTION OR WORK IS SUSPENDED OR ABANDONED FOR A PERIOD OF 1 YEAR AT ANY TIME AFTER WORK IS STARTED. ALL PERMITS ARE SUBJECT TO THE FOLLOWING :

- ALL WORK MUST COMPLY WITH THE BUILDING , ELECTRICAL, PLUMBING, AND MECHANICAL CODES ADOPTED BY THE CITY OF DEER PARK AT THE TIME THE PERMIT IS ISSUED .
- IT IS THE RESPONSIBILITY OF THE OWNER/CONTRACTOR TO COMPLY WITH ALL STATE & FEDERAL DISABILITY REQUIREMENTS .
- ENCROACHMENTS OF EASEMENTS AND RIGHT-OF-WAYS ARE NOT ALLOWED .

I HEREBY CERTIFY THAT I HAVE READ AND EXAMINED THIS DOCUMENT AND KNOW THE SAME TO BE TRUE AND CORRECT . ALL PROVISIONS OF LAWS AND ORDINANCES GOVERNING THIS TYPE OF WORK WILL BE COMPLIED WITH WHETHER SPECIFIED HEREIN OR NOT . GRANTING OF A PERMIT DOES NOT PRESUME TO GIVE AUTHORITY TO VIOLATE OR CANCEL THE PROVISION OF ANY OTHER STATE OR LOCAL LAW REGULATING CONSTRUCTION OR THE PERFORMANCE OF CONSTRUCTION .

BY MAIL

SIGNATURE OF CONTRACTOR OR AUTHORIZED AGENT DATE

Gary Bartlett

APPROVED BY DATE 11/14/2018

TO SCHEDULE NEXT DAY INSPECTIONS CALL BY 4PM 281-478-7270
ALL REINSPECTIONS ARE SUBJECT TO A $45.00 REINSPECTION FEE

You can request a morning or afternoon inspection and we will do our best to accommodate you but there are no guarantees, it will depend on the volume of inspections scheduled that day.

710 E San Augustine Deer Park, TX 77536 Fax 281-478-0394
www.deerparktx.gov/publicworks

at&t

SITE NAME: ATC GS ICE HOUSE RELO
SITE NUMBER: HX0713 (HX0549)
STRUCTURE TYPE: SELF SUPPORT TOWER
FA CODE: 14520886

2018 NSB PTN: 3063A0G201

THESE DRAWINGS ARE BASED ON RFDS VERSION V1.0, DATE UPDATED 9/28/2018
GENERAL CONTRACTOR TO VERIFY AND INCORPORATE MOST RECENT VERSION OF THE RFDS WITH TILLMAN INFRASTRUCTURE PRIOR TO CONSTRUCTION.

PREPARED FOR:

at&t

AT&T MOBILITY
1801 VALLEY VIEW LANE
FARMERS BRANCH, TX 75234

TILLMAN INFRASTRUCTURE

PROJECT INFORMATION

SITE NAME: ATC GS ICE HOUSE RELO
SITE NUMBER: HX0713 (HX0549)
911 ADDRESS: 6911 HWY 225
DEER PARK, TX 77536
LATITUDE: 29.708856° (29° 42' 31.88")
LONGITUDE: -95.098483° (95° 05' 54.54")
GROUND ELEVATION: 26' AMSL
JURISDICTION: CITY OF DEER PARK
STRUCTURE TYPE: SELF SUPPORT TOWER

DRIVING DIRECTIONS

DEPART GRUPO TAMPICO INTERNATIONAL:

GET ON I-45 N FROM AIRPORT BLVD AND MONROE BLVD 5MIN (1.9MI). TAKE TX-225 E TO PASADENA FREEWAY FRONTAGE RD IN DEER PARK. TAKE THE EXIT TOWARD INDEPENDENCE PARKWAY FROM TX-225 E 14MIN (13.9MI). CONTINUE ON PASADENA FREEWAY FRONTAGE RD TO YOUR DESTINATION 3MIN (0.9MI). ARRIVE ON SITE.

VICINITY MAP

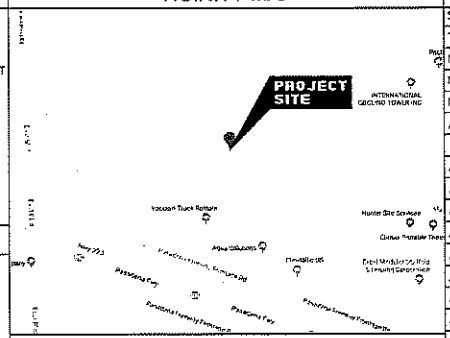

SHEET INDEX

SITE GENERAL ARRANGEMENT PLANS	
T1.0	COVER SHEET
N1.0	GENERAL NOTES
N1.1	GENERAL NOTES
N1.2	GENERAL NOTES
ARCHITECTURAL / CIVIL PLANS	
	SITE SURVEY (BY OTHERS)
A0.0	OVERALL AREA PLAN
A1.0	COMPOUND PLAN
A2.0	TOWER ELEVATION AND ANTENNA PLAN
A2.1	ANTENNA CONFIGURATION (SECTOR A)
A2.2	ANTENNA CONFIGURATION (SECTOR B)
A2.3	ANTENNA CONFIGURATION (SECTOR C)
A2.4	PLUMBING DIAGRAM
A3.0	SITE DETAILS
A3.1	FENCE DETAILS
A3.2	EQUIPMENT DETAILS
A3.3	EQUIPMENT DETAILS
A3.4	EQUIPMENT DETAILS
A3.5	EQUIPMENT DETAILS
A3.6	EQUIPMENT DETAILS
ELECTRICAL PLANS	
E1.0	ELECTRICAL AND TELCO PLAN
E2.0	ANTENNA GROUNDING PLAN, ONE-LINE DIAGRAM AND PANEL SCHEDULE
E2.1	COMPOUND GROUNDING PLAN
E3.0	GROUNDING DETAILS
E3.1	GROUNDING DETAILS
E4.0	ELECTRICAL SPECIFICATIONS

NOTE: DRAWING SCALES ARE FOR 22"X34" SHEETS UNLESS OTHERWISE NOTED.

SCOPE OF WORK

THE WIRELESS COMMUNICATIONS FACILITY IS NOT INTENDED FOR HUMAN OCCUPANCY

1. INSTALLATION OF (12) PANEL ANTENNAS
2. INSTALLATION OF (3) RRUS-11 (1 PER SECTOR)
3. INSTALLATION OF (3) RRUS-4426 B66 (1 PER SECTOR)
4. INSTALLATION OF (3) RRUS-4415 B25 (1 PER SECTOR)
5. INSTALLATION OF (3) RRUS-B14 4478 (1 PER SECTOR)
6. INSTALLATION OF (3) RRUS-4478 B5 (1 PER SECTOR)
7. INSTALLATION OF (3) RRUS-32 (1 PER SECTOR)
8. INSTALLATION OF (3) RRUS-12 (1 PER SECTOR)
9. INSTALLATION OF (6) DC POWER BUNDLES (7/8")
10. INSTALLATION OF (2) FIBER CABLE (1/2")
11. INSTALLATION OF (3) NEW ANTENNA SECTOR FRAME MOUNTS
12. INSTALLATION OF (2) DC6-48-60-18-8F (DC & FIBER) INSTALLATION OF (1) DC6-48-60-0-8F (DC ONLY)
13. INSTALLATION OF (1) 80"x 80"x 113" WALK IN CABINET ON 80"x80" PLATFORM WITH HELICAL ANCHORS
14. INSTALLATION OF (1) POLAR POWER 150W DC GENERATOR W/ 35"x49" PLATFORM

APPLICABLE CODES & STANDARDS

- INTERNATIONAL BUILDING CODE, 2012 EDITION AS ADOPTED BY LOCAL JURISDICTION.
- NATIONAL ELECTRICAL CODE, 2017 EDITION AS ADOPTED BY LOCAL JURISDICTION.
- INTERNATIONAL MECHANICAL CODE, 2012 EDITION AS ADOPTED BY LOCAL JURISDICTION.
- INTERNATIONAL ENERGY CONSERVATION CODE, 2012 EDITION AS ADOPTED BY LOCAL JURISDICTION

Texas 811
Know what's below.
Call before you dig.

CONTACTS

APPLICANT:
AT&T MOBILITY
1801 VALLEY VIEW LANE
FARMERS BRANCH, TX 75234

PROPERTY OWNER:
THOMAS CHRIS BEDFORD
6913 HIGHWAY 225
DEER PARK, TX 77536

TOWER OWNER:
TILLMAN INFRASTRUCTURE
152 W 57TH ST, 8TH FL
NEW YORK, NY 10019

CONSULTANT:
ANSEL YOUNG
SW REGION-CONSTRUCTION PROJECT MANAGER
PHONE: 817-690-7442
EMAIL: ayoung@tillmaninfrastructure.com

ARCHITECT/ENGINEER:
LEVEL 5 CONSULTING ENGINEERS
19315 FM 2252, SUITE 301
GARDEN RIDGE, TX 78266
CONTACT: DAVID HILDEBRANDT
PHONE: 210-542-5911

TELEPHONE COMPANY:
AT&T
PHONE: 1-800-288-2020

POWER COMPANY:
ORANGE & ROCKLAND UTILITIES
PHONE: 1-877-434-4100

APPROVALS

AT&T REAL ESTATE — DATE
AT&T RF ENGINEERING — DATE
AT&T CONSTRUCTION MANAGER — DATE
AT&T OPERATIONS — DATE
CONSTRUCTION MANAGER — DATE
PROPERTY OWNER — DATE
CONTRACTOR — DATE

THE ABOVE PARTIES HEREBY APPROVE AND ACCEPT THESE DOCUMENTS AND AUTHORIZE CONTRACTOR TO PROCEED WITH THE CONSTRUCTION DESCRIBED HEREIN. ALL DOCUMENTS ARE SUBJECT TO REVIEW BY THE LOCAL BUILDING DEPARTMENT AND MAY IMPOSE CHANGES OR MODIFICATIONS.

SITE ACCESS PROCEDURES

SITE NAME:
ATC GS ICE HOUSE RELO
SITE NUMBER:
HX0713 (HX0549)
SITE ADDRESS:
6911 HWY 225
DEER PARK, TX 77536
HARRIS COUNTY

STATE OF TEXAS
DAVID J. HILDEBRANDT
106713
LICENSED
PROFESSIONAL ENGINEER
11/6/18

LEVEL 5 CONSULTING ENGINEERS, INC.
19315 FM 2252, STE. 301 PH: (210) 542-5911
GARDEN RIDGE, TX 78266 F-13646

DRAWN BY:	IL
APPROVED BY:	TH
DATE DRAWN:	04/23/18

REVISION

NO	DESCRIPTION	BY	DATE
0	ISSUED FOR CONSTRUCTION	IL	04/23/18
1	NEW RFDS	IL	03/14/18
2	NEW RFDS	WS	11/07/18

SHEET TITLE:
COVER SHEET

SHEET NUMBER:
T1.0

ABBREVIATIONS

AFF	ABOVE FINISHED FLOOR
AGL	ABOVE GRADE LEVEL
AMSL	ABOVE MEAN SEA LEVEL
APPROX	APPROXIMATE
AWG	AMERICAN WIRE GAUGE
BLDG	BUILDING
BTS	BASE TRANSMISSION STATION
CLR	CLEAR
COL	COLUMN
CONC	CONCRETE
CND	CONDUIT
DWG	DRAWING
FT	FOOT (FEET)
EGB	EQUIPMENT GROUND BAR
ELEC	ELECTRICAL
EMT	ELECTRICAL METALLIC TUBING
ELEV	ELEVATION
EQUIP	EQUIPMENT
EXISTING	EXISTING
EXT	EXTERIOR
FND	FOUNDATION
F	FIBER
GA	GAUGE
GALV	GALVANIZED
GPS	GLOBAL POSITIONING SYSTEM
GND	GROUND
LTE	LONG TERM EVOLUTION
MAX	MAXIMUM
MFR	MANUFACTURER
MGB	MASTER GROUND BAR
MIN	MINIMUM
N.T.S.	NOT TO SCALE
NEW	NEW
O.C.	ON CENTER
OE/OT	OVERHEAD ELECTRIC/TELCO
PPC	POWER PROTECTION CABINET
RBS	RADIO BASED STATION
RRU	REMOTE RADIO UNIT
RGS	RIGID GALVANIZED STEEL
IN	INCH(ES)
INT	INTERIOR
LB(S) or #	POUND(S)
SF	SQUARE FOOT
STL	STEEL
TYP	TYPICAL
UE/UT	UNDERGROUND ELECTRIC/TELCO
UNO	UNLESS NOTED OTHERWISE
VIF	VERIFY IN FIELD
W/	WITH
XFMR	TRANSFORMER

LINE AND SYMBOL LEGEND

—X—	CHAIN-LINK FENCE BOUNDARY
—O—	WOOD FENCE BOUNDARY
— · —	UNDERGROUND ELECTRICAL CONDUIT AND FEEDER
— · · —	UNDERGROUND TELEPHONE COMPANY CONDUIT TO TELCO DEMARK POINT
—H—	HYBRID CABLE
—C—	MAIN COAX FEEDER
—T—	TELCO WIRING
—E—	POWER WIRING
—G—	GROUND WIRING
—F—	FIBER CABLE
■ ● ▲	CONNECTION (CADWELD OR EXOTHERMIC WELD TO STRUCTURE OR DEVICE)
	GROUNDING BAR
	GROUND POINT
	METER

1.0 GENERAL REQUIREMENTS:

1.1 PURPOSE AND INTENT:

A. THE DRAWINGS AND SPECIFICATIONS ARE INTENDED TO BE FULLY EXPLANATORY AND SUPPLEMENTARY. HOWEVER, SHOULD ANYTHING BE SHOWN, INDICATED OR SPECIFIED ON ONE AND NOT THE OTHER, IT SHALL BE DONE THE SAME AS IF SHOWN, INDICATED OR SPECIFIED IN BOTH. SHOULD THERE BE ANY DISCREPANCIES BETWEEN REQUIREMENTS SHOWN IN BOTH, THE MORE STRINGENT REQUIREMENTS SHALL APPLY.

B. THE INTENTION OF THE DOCUMENTS IS TO INCLUDE ALL LABOR AND MATERIALS REASONABLY NECESSARY FOR THE PROPER EXECUTION AND COMPLETION OF THE WORK AS STIPULATED IN THE CONTRACT.

C. THE PURPOSE OF THE AT&T WIRELESS CONSTRUCTION SPECIFICATIONS IS TO INTERPRET THE INTENT OF THE DRAWINGS AND TO DESIGNATE THE METHOD OF THE PROCEDURE, TYPE AND QUALITY OF MATERIALS REQUIRED TO COMPLETE THE WORK.

1.2 CONFLICTS:

A. VERIFY ALL MEASUREMENTS AT THE SITE BEFORE ORDERING MATERIAL OR DOING ANY WORK. NO EXTRA CHARGE OR COMPENSATION WILL BE ALLOWED DUE TO DIFFERENCES BETWEEN ACTUAL DIMENSIONS OR DIMENSIONS SHOWN ON PLANS. SUBMIT NOTICE OF ANY DISCREPANCY IN DIMENSIONS OR OTHERWISE TO AT&T WIRELESS FOR RESOLUTION BEFORE PROCEEDING WITH THE WORK.

B. NO PLEA OF IGNORANCE OF CONDITIONS THAT EXIST OR OF DIFFICULTIES OF CONDITIONS THAT MAY BE ENCOUNTERED, OR OF ANY OTHER RELEVANT MATTER CONCERNING THE EXECUTION OF THE WORK WILL BE ACCEPTED AS AN EXCUSE FOR ANY FAILURE OR OMISSION ON THE PART OF THE CONTRACTOR TO FULFILL EVERY DETAIL OF ALL THE REQUIREMENTS OF THE CONSTRUCTION DOCUMENTS GOVERNING THE WORK.

1.3 CLEANING:

KEEP THE SITE FREE FROM ACCUMULATION OF WASTE AND RUBBISH CAUSED BY EMPLOYEES AT THE COMPLETION OF THE WORK. REMOVE ALL WASTE AND NON-CONSTRUCTION MATERIAL, INCLUDING ALL CONTRACTOR TOOLS, SCAFFOLDING AND SURPLUS MATERIAL AND LEAVE SITE CLEAN AND READY FOR USE.

1.4 CODES:

CONTRACTOR SHALL BE RESPONSIBLE FOR FOLLOWING ALL LAWS, REGULATIONS AND RULES PROMULGATED BY FEDERAL, STATE AND LOCAL AUTHORITIES WITH JURISDICTION OVER THE SITE. THIS RESPONSIBILITY IS IN EFFECT REGARDLESS OF WHETHER THE LAW, ORDINANCE, REGULATION OR RULE IS MENTIONED IN THESE SPECIFICATIONS.

1.5 LICENSING:

HAVE AND MAINTAIN A VALID CONTRACTORS LICENSE FOR THE LOCATION IN WHICH THE WORK IS TO BE PERFORMED. FOR JURISDICTIONS THAT LICENSE INDIVIDUAL TRADES, THE TRADESMAN OR SUBCONTRACTORS PERFORMING THOSE TRADES SHALL BE LICENSED, RESEARCH AND COMPLY WITH LICENSING LAWS, PAY LICENSE FEES, AND SELECT AND INFORM SUBCONTRACTORS REGARDING THESE LAWS.

1.6 OSHA:

FOLLOW ALL APPLICABLE RULES AND REGULATIONS OF THE OCCUPATIONAL SAFETY AND HEALTH ADMINISTRATIONS, AND STATE LAWS BASED IN THE FEDERAL OCCUPATIONAL SAFETY AND HEALTH ACT. THESE REGULATIONS INCLUDE BUT ARE NOT LIMITED TO REGULATIONS DEALING WITH TOWER CONSTRUCTION AND SAFETY, EXCAVATIONS AND TRENCHING, AND WORK IN CONFINED SPACES. ENSURE THAT EMPLOYEES AND SUBCONTRACTORS WEAR HARD HATS AT All TIMES DURING CONSTRUCTION.

1.7 PHOTOS:

PROVIDE PHOTOGRAPHIC EVIDENCE OF ALL SCOPE RELATED WORK, INCLUDING BUT NOT LIMITED TO GROUNDING AND TRENCHING AFTER PLACEMENT OF UTILITIES PRIOR TO BACKFILL.

1.8 BUILDING PERMITS:

AT&T WIRELESS WILL SUBMIT CONSTRUCTION DOCUMENTS TO THE JURISDICTIONAL AUTHORITY FOR PLAN CHECK AND REVIEW. CONTRACTOR WILL SUBMIT LICENSING AND WORKMAN'S COMPENSATION INFORMATION TO THE JURISDICTION AS REQUIRED TO OBTAIN THE BUILDING PERMIT. CONTRACTOR SHALL COORDINATE AND SCHEDULE REQUIRED INSPECTIONS AND POST REQUIRED PERMITS AT THE JOB SITE. COMPLY WITH SPECIFIC PROJECT-RELATED REQUESTS AND SUGGESTIONS MADE BY BUILDING INSPECTOR AND INFORM CONSTRUCTION MANAGER OF ANY SUCH WORK THAT MAY BE BEYOND THE SCOPE OF THE CONTRACT OR DEVIATE FROM THE CONSTRUCTION DOCUMENTS. AT&T WIRELESS WILL REIMBURSE THE CONTRACTOR FOR FEES FOR PLAN REVIEW, BUILDING PERMIT, CONNECTIONS AND INSPECTION.

1.9 ZONING REGULATIONS AND CONDITIONAL USE PERMITS:

AT&T WIRELESS WILL SUBMIT FOR AND OBTAIN ALL ZONING AND CONDITIONAL USE PERMITS. SOME USE PERMITS MAY HAVE SPECIFIC REQUIREMENTS RELATED TO THE CONSTRUCTION SUCH AS NOISE REGULATIONS, HOURS OF WORK, ACCESS LIMITATIONS, ETC. THE CONSTRUCTION MANAGER WILL INFORM THE CONTRACTOR OF THESE REQUIREMENTS AT THE PRE-BID MEETING OR AS SHOWN IN CONSTRUCTION DOCUMENTS.

1.10 FM PERMIT AND TOWER LIGHTING:

REFER TO CONSTRUCTION DOCUMENTS AND CONSTRUCTION MANAGER FOR FAA AND STATE LIGHTING REQUIREMENTS. CONTRACTOR SHALL PROVIDE TEMPORARY FM APPROVED LIGHTING UNTIL PERMANENT LIGHTING IS OPERATIONAL.

1.11 TOWER SECURITY:

TOWER MUST BE FENCED, TEMPORARILY OR PERMANENTLY WITHIN 24 HOURS OF ERECTION. DO NOT ALLOW THE GATE ACCESSING THE TOWER AREA TO REMAIN OPEN OR UNATTENDED AT ANY TIME FOR ANY REASON. KEEP THE GATE CLOSED AND LOCKED WHEN NOT IN USE.

1.12 SITE CONTROL:

A. THE CONTRACTOR IS COMPLETELY RESPONSIBLE FOR CONTAINMENT OF SEDIMENT AND CONTROL OF EROSION AT THE SITE. ANY DAMAGE TO ADJACENT OR DOWNSTREAM PROPERTIES WILL BE CORRECTED BY THE CONTRACTOR AT NO EXPENSE TO AT&T WIRELESS.

B. THE CONTRACTOR IS TO MAINTAIN ADEQUATE DRAINAGE AT ALL TIMES. DO NOT ALLOW WATER TO STAND OR POND. ANY DAMAGE TO STRUCTURES OR WORK ON THE SITE CAUSED BY INADEQUATE MAINTENANCE OF DRAINAGE PROVISIONS WILL BE THE RESPONSIBILITY OF THE CONTRACTOR AND ANY COST ASSOCIATED WITH REPAIRS FOR SUCH DAMAGE WILL BE AT THE CONTRACTOR'S EXPENSE.

C. ALL WASTE MATERIAL SHALL BE PROPERLY DISPOSED OF OFF-SITE OR AS DIRECTED BY THE CONSTRUCTION MANAGER AND IN ACCORDANCE WITH JURISDICTIONAL AUTHORITIES.

2.0 SITE PREPARATION:

2.1 SCOPE OF WORK INCLUDES:

A. PROTECTION OF EXISTING TREES, VEGETATION AND LANDSCAPING MATERIALS WHICH MIGHT BE DAMAGED BY CONSTRUCTION ACTIVITIES.

B. TRIMMING OF EXISTING TREES AND VEGETATION AS REQUIRED FOR PROTECTION DURING CONSTRUCTION ACTIVITIES.

C. CLEARING AND GRUBBING OF STUMPS, VEGETATION, DEBRIS, RUBBISH, DESIGNATED TREES, AND SITE IMPROVEMENTS.

D. TOPSOIL STRIPPING AND STOCKPILING.

E. TEMPORARY EROSION CONTROL, SILTATION CONTROL AND DUST CONTROL CONFORMING TO LOCAL REQUIREMENTS AS APPLICABLE.

F. TEMPORARY PROTECTION OF ADJACENT PROPERTY, STRUCTURES, BENCHMARKS AND MONUMENTS.

G. PROTECTION AND TEMPORARY RELOCATION, STORAGE AND RE-INSTALLATION OF DUSTING FENCING AND OTHER SITE IMPROVEMENTS SCHEDULED FOR REUSE.

H. REMOVAL AND LEGAL DISPOSAL OF CLEARED MATERIALS.

2.2 PRODUCTS AND MATERIALS (AS APPROVED BY CONSTRUCTION MANAGER OR AS NOTED IN CONSTRUCTION DOCUMENTS):

A. MATERIALS USED FOR TREE PROTECTION, EROSION CONTROL, SILTATION CONTROL AND DUST CONTROL AS SUITABLE FOR SPECIFIC SITE CONDITIONS.

3.0 EARTH WORK:

3.1 SCOPE OF WORK INCLUDES:

A. EXCAVATION, TRENCHING, FILLING, COMPACTION, AND GRADING FOR STRUCTURES, SITE IMPROVEMENTS AND UTILITIES.

B. MATERIALS FOR SUB-BASE DRAINAGE FILL, FILL, BACKFILL AND GRAVEL FOR SLABS, PAVEMENTS AND IMPROVEMENTS.

C. ROCK EXCAVATION WITHOUT BLASTING.

D. SUPPLY OF ADDITIONAL MATERIALS FROM OFFSITE AS REQUIRED.

E. REMOVAL AND LEGAL DISPOSAL OF EXCAVATED MATERIALS AS REQUIRED.

3.2 QUALITY ASSURANCE:

A. COMPACTION:

1. UNDER STRUCTURES, BUILDING SLABS, PAVEMENTS AND WALKWAYS WILL OBTAIN A 95 PERCENT COMPACTION AT A MAXIMUM DRY DENSITY AS DETERMINED BY ASTM D-1557 OR WITHIN PLUS OR MINUS 3 PERCENT OF OPTIMUM MOISTURE.

B. GRADING TOLERANCES OUTSIDE BUILDING CODES:

1. LAWNS, UNPAVED AREAS AND WALKS PLUS OR MINUS 1 INCH.

2. UNDER PAVEMENTS PLUS OR MINUS 1/2 INCH.

C. GRADING TOLERANCE FOR FILL UNDER ALL CONCRETE APPLICATIONS: PLUS OR MINUS 1/2 INCH MEASURED WITH 10 FOOT STRAIGHTEDGE.

3.3 PRODUCTS AND MATERIALS (AS APPROVED BY CONSTRUCTION MANAGER OR AS NOTED IN CONSTRUCTION DOCUMENTS):

A. SUBBASE MATERIAL GRADED MIXTURE OF NATURAL OR CRUSHED GRAVEL, CRUSHED STONE OR SLAG, AND NATURAL SAND.

B. WASHED MATERIAL EVENLY GRADED MIXTURE OF CRUSHED STONE OR GRAVEL WITH 95 PERCENT PASSING A 1 1/2 INCH SIEVE.

C. GRADING MATERIAL WILL CONSIST OF: SATISFACTORY NATIVE OR IMPORTED SOIL MATERIALS FREE OF CLAY, ROCK OR GRAVEL NOT LARGER THAN 2 INCHES IN ANY DIMENSION, DEBRIS, WASTE, FROZEN MATERIALS AND OTHER UNSUITABLE MATERIALS WILL NOT BE ALLOWED FOR USE. IMPORTED MATERIALS SHALL HAVE A CLAY CONTENT NO MORE THAN 5 PERCENT.

PREPARED FOR:

at&t

AT&T MOBILITY
1801 VALLEY VIEW LANE
FARMERS BRANCH, TX 75234

TILLMAN INFRASTRUCTURE

SITE NAME:
ATC GS ICE HOUSE RELO
SITE NUMBER:
HX0713 (HX0549)
SITE ADDRESS:
6911 HWY 225
DEER PARK, TX 77536
HARRIS COUNTY

STATE OF TEXAS
DAVID J. HILDEBRANDT
106713
LICENSED
PROFESSIONAL ENGINEER
11/6/18

LEVEL 5 CONSULTING ENGINEERS, INC.
19315 FM 2252, STE. 301 PH: (210) 542-5911
GARDEN RIDGE, TX 78266 F-13646

DRAWN BY:	IL
APPROVED BY:	TH
DATE DRAWN:	04/23/18

REVISION

NO	DESCRIPTION	BY	DATE
0	ISSUED FOR CONSTRUCTION	IL	04/23/18
1	NEW RFDS	IL	03/14/18
2	NEW RFDS	WS	11/07/18

SHEET TITLE:
GENERAL NOTES

SHEET NUMBER:
N1.0

D. BACKFILL MATERIALS WILL CONSIST OF: SATISFACTORY NON-COHESIVE NATIVE OR IMPORTED SOIL MATERIALS FREE OF CLAY, ROCK OR GRAVEL NOT LARGER THAN 4 INCHES IN ANY DIMENSION, DEBRIS, WASTE, FROZEN MATERIALS, AND OTHER UNSUITABLE MATERIALS. IMPORTED MATERIAL SHALL HAVE A CLAY CONTENT OF NO MORE THAN 5 PERCENT.

E. GRAVEL MATERIAL EVENLY GRADED MIXTURE OF CRUSHED STONE OR GRAVEL WITH 95 PERCENT PASSING A 1 1/2 INCH SIEVE.

F. GEOTEXTILE FABRIC: AS PER CONSTRUCTION DOCUMENTS.

3.4 CLEARING AND GRUBBING REMOVE ALL VEGETATION AND MATERIALS AS REQUIRED. REMOVE STUMPS COMPLETELY UNDER FOUNDATIONS AND ROADWAY. DISPOSE OF CLEARING AND GRUBBING OFF-SITE, OR IN AN ON-SITE LOCATION APPROVED BY CONSTRUCTION MANAGER.

3.5 STRIPPING:

STRIP NOT LESS THAN 3 INCHES OF SOD AND TOPSOIL FROM AREAS THAT WILL UNDERLAY GRAVEL PAVEMENT, NEW STRUCTURES OR NEW EMBANKMENTS. STOCKPILE STRIPPING ON-SITE FOR RE-USE IN FINAL LANDSCAPING.

3.6 COMMON EXCAVATION:

A. EXCAVATE TO DEPTH, LINES AND GRADES SHOWN ON THE PLANS OR AS OTHERWISE SPECIFIED.

B. TEMPORARILY STOCKPILE ON-SITE EXCAVATION AT AN APPROVED LOCATION WITHIN THE WORK AREA UNTIL SITE GRADING IS COMPLETE STOCKPILE SHALL NOT EXCEED 15 FEET IN HEIGHT.

C. LEGALLY DISPOSE OF EXCESS COMMON EXCAVATION OFF-SITE.

3.7 EMBANKMENT:

A. CONSTRUCT EMBANKMENT TO THE LINES AND GRADE SHOWN ON THE DRAWINGS.

B. CONSTRUCT EMBANKMENT FROM ON-SITE EXCAVATION MATERIALS WHEN SUITABLE USE IMPORTED BACKFILL ONLY AFTER AVAILABLE ON-SITE EXCAVATION MATERIALS HAVE BEEN USED.

C. CONSTRUCT IN LIFTS OF NOT MORE THAN 12 INCHES IN LOOSE DEPTH. THE FULL WIDTH OF THE CROSS SECTION SHALL BE BROUGHT UP UNIFORMLY.

D. MATERIAL SHALL NOT BE PLACED IN LAYERS AND SHALL BE NEAR OPTIMUM MOISTURE CONTENT BEFORE ROLLING TO OBTAIN THE PRESCRIBED COMPACTION. WETTING OR DRYING OF THE MATERIAL AND MANIPULATION TO SECURE A UNIFORM MOISTURE CONTENT THROUGHOUT THE LAYER MAY BE REQUIRED. SUCH OPERATIONS SHALL BE INCLUDED IN THE APPROPRIATE BID ITEM. SHOULD THE MATERIAL BE TOO WET TO PERMIT PROPER COMPACTION, IT IS THE CONTRACTOR'S RESPONSIBILITY TO UTILIZE MATERIAL WITH AN ACCEPTABLE MOISTURE CONTENT.

E. DO NOT PLACE FROZEN MATERIAL IN THE EMBANKMENT AND DO NOT PLACE EMBANKMENT MATERIAL UPON FROZEN MATERIAL.

F. CONTRACTOR SHALL BE RESPONSIBLE FOR THE STABILITY OF EMBANKMENTS AND THE REPLACEMENT OF ANY PORTION WHICH HAS BECOME DISPLACED DUE TO THE CONTRACTORS OPERATIONS.

G. START LAYERS IN THE DEEPEST PORTION OF THE FILL, AND AS PLACEMENT PROGRESSES, CONSTRUCT LAYERS APPROXIMATELY PARALLEL TO THE FINISHED GRADE LINE.

H. ROUTE EQUIPMENT, BOTH LOADED AND EMPTY, OVER THE FULL WIDTH OF EMBANKMENT TO ENSURE UNIFORMITY OF MATERIAL PLACEMENT.

I. COMPACT EMBANKMENT UNDERLYING NEW GRAVEL PAVING FLOOR SLABS AND STRUCTURES TO A 95 PERCENT COMPACTION AT A MAXIMUM DRY DENSITY AS DETERMINED BY ASTM D-1557 OR WITHIN PLUS OR MINUS 3 PERCENT OF OPTIMUM MOISTURE CONTENT. COMPACT NON-STRUCTURAL AREA EMBANKMENTS TO A MINIMUM OF 90 % OF ASTM D-1557.

3.8 SITE GRADING:

A. USING ON-SITE EXCAVATION MATERIALS SHAPE, TRIM, FINISH AND COMPACT SURFACE AREAS TO CONFORM TO THE LINES, GRADES AND CROSS SECTIONS SHOWN ON THE DRAWINGS OR AS DESIGNATED BY THE CONSTRUCTION MANAGER.

B. GRADE SURFACES TO DRAIN AND ELIMINATE ANY PONDING OR EROSION.

C. ELIMINATE WHEEL RUTS BY REGRADING.

D. COMPACT AREAS UNDERLYING NEW GRAVEL PAVING, FLOOR SLABS AND STRUCTURES TO A 95 PERCENT COMPACTION AT A MAXIMUM DRY DENSITY AS DETERMINED BY ASTM D-1551 OR WITHIN PLUS OR MINUS 3 PERCENT OF OPTIMUM MOISTURE CONTENT.

E. CONSTRUCT FINISHED SURFACE OF SITE GRADING AREAS WITHIN ONE INCH FROM SPECIFIED GRADE.

3.9 SUBGRADE PREPARATION:

A. SHAPE TOP OF SUBGRADE TO THE LINES AND GRADES SHOWN ON THE DRAWINGS.

B. MAINTAIN TOP OF SUBGRADE TO A FREE-DRAINING CONDITION.

C. DO NOT STOCKPILE MATERIALS ON TOP OF SUBGRADE UNLESS AUTHORIZED BY CONSTRUCTION MANAGER.

D. COMPACT THE TOP 12 INCHES OF SUBGRADE TO A 95% COMPACTION AT A MAXIMUM DRY DENSITY AS DETERMINED BY ASTM D-1557 OR WITHIN PLUS OR MINUS 3 PERCENT OF OPTIMUM MOISTURE CONTENT.

C. CONSTRUCT TOP OF SUBGRADE WITHIN ONE INCH OF ESTABLISHED GRADE AND CROSS-SECTION.

3.10 GEOTEXTILE FABRIC:

A. LAY GEOTEXTILE FABRIC OVER COMPACTED SUBGRADE AS PER CONSTRUCTION DOCUMENTS IN THE COMPOUND AREA AND UNDER LENGTH OF ROAD (WHEN REQUIRED). LAP ALL JOINTS TO A MINIMUM OF 36 INCHES.

3.11 GRAVEL SURFACING:

A. CONSTRUCT GRAVEL SURFACING AREAS USING CRUSHED AGGREGATE BASE AND FINISH COURSES AS SPECIFIED BY CONSTRUCTION MANAGER OR CONSTRUCTION DOCUMENTS.

B. SPREAD GRAVEL AND RAKE TO OBTAIN A UNIFORM SURFACE AREA.

4.0 TRENCHING:

CALL LOCAL UNDERGROUND UTILITY LOCATING SERVICE BEFORE ANY EXCAVATION OR TRENCHING.

4.1 MATERIALS:

FILL MATERIAL SHALL BE OBTAINED, WHEN POSSIBLE FROM MATERIALS EXCAVATED FROM TRENCHES. ON-SITE STRUCTURAL FILL SAND OR SLURRY SHALL BE APPROVED BY THE CONSTRUCTION MANAGER AND SHALL CONFORM TO LOCAL GOVERNING JURISDICTIONS AND UTILITY COMPANY REQUIREMENTS. THE FILL MATERIAL SHALL CONTAIN NO ORGANIC MATERIAL OR ROCKS, NOR SHALL CONTAIN OBJECTIONABLE MATERIALS AND/OR MATERIALS DESIGNATED AS HAZARDOUS OR INDUSTRIAL BY THE ENVIRONMENTAL PROTECTION AGENCY (EPA). THE FILL MATERIAL SHALL CONTAIN FINES SUFFICIENT TO FILL ALL VOIDS IN THE MATERIAL COMPACTION OF BACKFILL OR BORROW SOIL SHALL BE PLACED IN 12 INCH LOOSE LIFTS WHEN UTILIZING HEAVY COMPACTION EQUIPMENT OR 6 INCH LOOSE LIFTS WHEN UTILIZING HAND OPERATED TAMPERS.

4.2 PIPE DETECTION AND IDENTIFICATION:

A. UTILIZING WARNING TAPE: ALL ELECTRIC SERVICE TRENCHES SHALL BE MARKED WITH WARNING TAPE.

4.3 TRENCH EXCAVATION:

A. DIG TRENCH TO LINES AND GRADES SHOWN ON THE PLANS OR AS DIRECTED BY CONSTRUCTION MANAGER.

B. TRENCH LENGTH SHALL BE SUFFICIENT TO ALLOW FOR SATISFACTORY CONSTRUCTION AND INSPECTION OF THE PROJECT WITHOUT ENDANGERING OTHER CONSTRUCTION WORK OR ADJACENT FACILITIES.

C. DISPOSE OF EXCESS AND UNSUITABLE EXCAVATION MATERIAL PROPERLY, AS DIRECTED BY CONSTRUCTION MANAGER.

D. USE HAND METHODS FOR EXCAVATION THAT CANNOT BE ACCOMPLISHED WITHOUT ENDANGERING EXISTING OR NEW STRUCTURES OR OTHER FACILITIES.

4.4 TRENCH PROTECTION:

A. PROVIDE MATERIALS, LABOR AND EQUIPMENT NECESSARY TO PROTECT TRENCHES AT ALL TIMES.

B. SHEETING AND BRACING (MEET OR EXCEED OSHA REQUIREMENTS).

4.5 BACKFILLING:

A. NOTIFY THE CONSTRUCTION MANAGER AT LEAST 24 HOURS IN ADVANCE OF BACKFILLING.

B. BACKFILL TRENCH WITH LIFTS UP TO 12 INCHES, LOOSE MEASURE.

C. PROTECT CONDUIT FROM LATERAL MOVEMENT, DAMAGE FROM IMPACT OR UNBALANCED LOADING TO AVOID DISPLACEMENT OF CONDUIT AND/OR STRUCTURES. DO NOT FREE FALL BACKFILL INTO TRENCH UNTIL AT LEAST 12 INCHES OF COVER IS OVER THE CONDUIT.

4.6 COMPACTION:

A. COMPACT BACKFILL TO A 95 PERCENT COMPACTION AT A MAXIMUM DRY DENSITY AS DETERMINED BY ASTM D-1557 OR WITHIN PLUS OR MINUS 3 PERCENT OF OPTIMUM MOISTURE CONTENT.

B. IF REQUIRED COMPACTION DENSITY HAS NOT BEEN OBTAINED, REMOVE THE BACKFILL FROM THE TRENCH OR STRUCTURE, REPLACE WITH APPROVED BACKFILL AND RECOMPACT AS SPECIFIED.

C. ANY SUBSEQUENT SETTLEMENT OF TRENCH OR STRUCTURE BACKFILL DURING MAINTENANCE PERIOD SHALL BE CONSIDERED THE RESULT OF IMPROPER COMPACTION AND SHALL BE PROMPTLY CORRECTED.

5.0 CHAIN LINK FENCES AND GATES:

5.1 GENERAL:

A. PROVIDE CHAIN LINK FENCES AND GATES AS COMPLETE UNITS BY A SINGLE SUPPLY SOURCE INCLUDING NECESSARY ERECTION ACCESSORIES, FITTINGS AND FASTENERS.

5.2 PRODUCTS AND MATERIALS (AS APPROVED BY CONSTRUCTION MANAGER OR AS WITHIN CONSTRUCTION DOCUMENTS):

A. COMPOUND FABRIC 84 INCHES HIGH AND OVER WITH 2-INCH MESH SHALL BE KNUCKLED AT ONE SELVAGE AND TWISTED AT THE OTHER.

B. STEEL FABRIC:

COMPLY WITH CHAIN LINK FENCE MANUFACTURERS INSTITUTE (CLFMI) PRODUCT MANUAL. FURNISH ONE PIECE OF FABRIC WIDTHS. WIRE SIZE INCLUDES ZINC OR ALUMINUM COATING.

1. SIZE: 2-INCH MESH 9 GAUGE (0.148-INCH DIAMETER) WIRE.

2. GALVANIZED STEEL FINISH: ASTM A 392, CLASS 2, WITH A MINIMUM OF 2.0 OZ. ZINC PER SQ. FT. OF UNCOATED WIRE SURFACE.

C. FRAMEWORK AND ACCESSORIES:

1. GENERAL REQUIREMENTS: EXCEPT AS INDICATED OTHERWISE CONFORM TO THE CHAIN LINK FENCE MANUFACTURERS INSTITUTE (CLFMI) PRODUCT MANUAL INDUSTRIAL STEEL GUIDE FOR FENCE RAILS, POSTS, GATES AND ACCESSORIES INCLUDING TABLE II.

2. STRENGTH REQUIREMENTS FOR POSTS AND RAILS CONFORMING TO ASTM F 669.

3. TYPE 1 PIPE HOT-DIPPED GALVANIZED STEEL PIPE CONFORMING TO ASTM F 1083. PLANE ENDS, STANDARD WEIGHT (SCHEDULE 40) WITH NOT LESS THAN 18 OZ. ZINC PER SQ. FT. OF SURFACE AREA COATED.

4. FILLINGS: COMPLY WITH ASTM F 526 MILL FINISHED ALUMINUM OR GALVANIZED IRON STEEL TO COMPLY WITH MANUFACTURER'S REQUIREMENTS.

5. TOP RAIL MANUFACTURERS LONGEST LENGTHS, WITH EXPANSION TYPE COUPLINGS, APPROXIMATELY 6 INCHES LONG, FOR EACH JOINT. PROVIDE MEANS FOR ATTACHING TOP RAIL SECURELY TO EACH GATE CORNER, PULL AND END POST.

D. GALVANIZED STEEL 11/4 INCH NPS (1.66 INCH OD) TYPE I OR II STEEL PIPE OR 1.625 INCH X 1.25 INCH ROLL-FORMED C SECTIONS WEIGHING 1.35 LBS. PER FT.

E. SWING GATES:

COMPLY WITH ASTM F 9000. PROVIDE HARDWARE AND ACCESSORIES FOR EACH GATE. GALVANIZED PER ASTM A 153, AND IN ACCORDANCE WITH THE FOLLOWING:

1. HINGES: NON LIFT-OFF TYPE. OFFSET TO PERMIT 180 DEG. GATE OPENING.

2. LATCH: MTS MULTI-LOCKING DEVICE MT-C6477 OR APPROVED EQUAL.

3. KEEPER: PROVIDE KEEPER FOR VEHICLE GATES, WHICH AUTOMATICALLY ENGAGES GATE LEAF AND HOLDS IT IN OPEN POSITION UNTIL MANUALLY RELEASED.

F. CONCRETE:

PROVIDE CONCRETE CONSISTING OF PORTLAND CEMENT, ASTM C 150, AGGREGATES ASTM C 33, AND CLEAN WATER. MIX MATERIALS TO OBTAIN CONCRETE WITH A MINIMUM OF 28-DAY COMPRESSIVE STRENGTH OF 3000 PSI.

6.0 LANDSCAPING:

A. FURNISH, INSTALL AND MAINTAIN LANDSCAPE WORK AS SHOWN AND OR REQUIRED WITHIN THE CONSTRUCTION DOCUMENTS OR AS SPECIFIED IN THE AT&T WIRELESS CONSTRUCTION SPECIFICATIONS.

7.0 CONCRETE FORMWORK:

A. FORMS: SMOOTH AND FREE OF SURFACE IRREGULARITIES. UTILIZE FORM RELEASE AGENTS.

B. CHAMFER: EXPOSED EDGES OF ALL TOWER FOUNDATIONS SHALL RECEIVE A 3/4" BY 3/4" 45 DEGREE CHAMFER. OTHER EXPOSED EDGES SHALL RECEIVE A TOOLED RADIUS FINISH.

C. UPON COMPLETION, REMOVE ALL FORMS, INCLUDING THOSE CONCEALED OR BURIED.

D. REFER TO STRUCTURAL DRAWINGS FOR ADDITIONAL REQUIREMENTS.

8.0 CONCRETE REINFORCEMENT:

REFER TO STRUCTURAL DRAWINGS FOR ALL REQUIREMENTS.

PREPARED FOR:

at&t

AT&T MOBILITY
1801 VALLEY VIEW LANE
FARMERS BRANCH, TX 75234

TILLMAN INFRASTRUCTURE

SITE NAME:
ATC GS ICE HOUSE RELO
SITE NUMBER:
HX0713 (HX0549)
SITE ADDRESS:
6911 HWY 225
DEER PARK, TX 77536
HARRIS COUNTY

STATE OF TEXAS
DAVID J. HILDEBRANDT
106713
LICENSED
PROFESSIONAL ENGINEER
11/6/18

LEVEL 5 CONSULTING ENGINEERS, INC.
19315 FM 2252, STE. 301
GARDEN RIDGE, TX 78266
PH: (210) 542-5911
F-13646

DRAWN BY:	IL
APPROVED BY:	TH
DATE DRAWN:	04/23/18

REVISION

NO	DESCRIPTION	BY	DATE
0	ISSUED FOR CONSTRUCTION	IL	04/23/18
1	NEW RFDS	IL	03/14/18
2	NEW RFDS	WS	11/07/18

SHEET TITLE:
GENERAL NOTES

SHEET NUMBER:
N1.1

9.0 CAST IN PLACE CONCRETE:

FOR STRUCTURAL CONCRETE (FOOTINGS, FOUNDATIONS, ETC.), REFER TO STRUCTURAL DRAWINGS FOR REQUIREMENTS. FOR ANY MISCELLANEOUS CONCRETE, REFER TO SPECIFICATION BOOK OR OBTAIN REQUIREMENTS FROM CONSTRUCTION MANAGER.

A. ALL CONCRETE SHALL COMPLY WITH ASTM C94 UNLESS NOTED OTHERWISE.

B. MINIMUM COMPRESSIVE STRENGTH (F'C) AT 28 DATS: 4000 PSI FOR TOWER FOUNDATION AND 3500 PSI FOR ALL OTHER CONCRETE UNLESS SPECIFIED IN CONSTRUCTION DOCUMENTS.

C. AIR ENTRAINMENT:

PROVIDE 4 TO 8% AIR ENTRAINMENT FOR ALL CONCRETE SUBJECT TO FREEZE-THAW CYCLE.

D. CONCRETE TESTING:

ALL FOUNDATION CONCRETE SHALL BE TESTED BY AN INDEPENDENT TESTING AGENCY APPROVED BY THE CONSTRUCTION MANAGER. ALL STRUCTURAL TOWER FOUNDATION CONCRETE MUST BE EQUIPMENT OR BUILDING PADS ARE NOT REQUIRED TO BE TESTED, UNLESS OTHERWISE NOTED BY CONSTRUCTION MANAGER. PROVIDE A MINIMUM OF 5 CYLINDERS (2-7-DAY, 2-28-DAY, 1-SPARE) FOR EACH DATS POUR, OR FOR EVERY 50 YARDS PLACED, WHICHEVER IS GREATER. ADDITIONAL TESTS OR CYLINDERS MAY BE REQUIRED BY CONSTRUCTION MANAGER. A SLUMP, AIR, AND TEMPERATURE TEST SHALL BE PERFORMED FOR EACH SET OF CYLINDERS CAST. PREFERABLY, TESTS SHALL BE PERFORMED AT THE LOCATION OF ANCHOR BOLTS (PIERS - FOR MAT & PIERS, CAISSONS TOP 1/3 OF CAISSON). TESTS SHALL ALSO BE REQUIRED FOR CONCRETE CONSIDERED BEING LESS THAN DESIRABLE BY CONCRETE SPECIFICATION STANDARDS. THE TESTING AGENCY HAS THE AUTHORITY TO NOT ACCEPT CONCRETE MEETING THESE SPECIFICATIONS FOR AT&T WIRELESS. THE CONTRACTOR IS RESPONSIBLE FOR ANY CONCRETE NOT MEETING THESE STANDARDS. THE CONTRACTOR IS RESPONSIBLE FOR COORDINATION OF THE TESTING AGENCY A MINIMUM OF 24 HOURS IN ADVANCE OF EACH FOUNDATION POUR. TEST REPORTS SHALL BE FORWARDED TO AT&T CONSTRUCTION MANAGER WITHIN 24 HOURS OF LAB TEST.

E. VIBRATE ALL CONCRETE USING SUFFICIENT HIGH FREQUENCY LOW AMPLITUDE MECHANICAL IMMERSION TYPE VIBRATORS. INSERT VIBRATORS IN CONCRETE AT REGULAR INTERVALS AND OVER ENTIRE SURFACE TO SOLIDLY FILL CONCRETE MECHANICAL IMMERSION TYPE VIBRATORS. INSERT VIBRATORS IN CONCRETE AT REGULAR INTERVALS AND OVER ENTIRE SURFACE TO SOLIDLY FILL CONCRETE AROUND AND BETWEEN REINFORCEMENT BARS AND INTO CORNERS AND IRREGULARITIES. VIBRATE THOROUGHLY THROUGH EACH LIFT TO THE PREVIOUS LIFE REVERBERATION AS LATE AS THE RUNNING VIBRATOR WILL SINK THROUGH UPPER LAYERS OF ITS WEIGHT IS RECOMMENDED. DISCONTINUE VIBRATION WHEN RISING ENTRAPPED AIR BUBBLES STOP BREAKING THE LEVELING SURFACE. DO NOT OVER VIBRATE AS THIS MAY CAUSE SEGREGATION.

F. FINISHING EXPOSED CONCRETE SURFACES:

1. THESE PROVISIONS APPLY TO ALL EXPOSED AND ALL FORMED CONCRETE, EXTERIOR OR INTERIOR. UNLESS SPECIFICALLY DETAILED OTHERWISE, PERFORM PROCEDURES PRIOR TO APPLICATION OF ANY CURING COMPOUNDS.

2. ALL SURFACES: THOROUGHLY CLEAN OFF ALL STAINS, SPATTER AND LOOSE MATERIAL.

3. FINS, RIDGES AND HIGH SPOTS: HONE SMOOTH WITH ABRASIVE POWER GRINDERS WHILE CONCRETE IS GREEN, IMMEDIATELY AFTER FORM REMOVAL.

4. FORM TIE HOLES AND DEEP DEPRESSIONS: FLUSH THOROUGHLY WITH CLEAN WATER AND TAMP TO OVERFULL WITH DRYPACK. CURE 10 DAYS AND HONE FLUSH AND SMOOTH.

5. ROCK POCKETS, HONEYCOMB, SAND STREAKS, DEBRIS AND VOIDS: CUT OUT AT LEAST 1 INCH DEEP WITH SIDES PERPENDICULAR TO SURFACE. FLUSH THOROUGHLY WITH CLEAN WATER, COAT SURFACE WITH NEAT CEMENT PASTE AND TAMP TO OVERFULL WITH DRYPACK IN AT LEAST TWO LAYERS. CURE FOR 10 DAYS AND HONE FLUSHED AND SMOOTH.

G. CONTRACTOR SHALL VERIFY ALL SIZES AND LOCATIONS OF ALL ELECTRICAL OPENINGS AND EQUIPMENT/BUILDING PADS WITH THE ELECTRICAL DRAWINGS AND SHOP DRAWINGS. IT SHALL BE THE RESPONSIBILITY OF THE CONTRACTOR TO PROVIDE ALL OPENINGS AND SLEEVES FOR PROPER DISTRIBUTION FOR ALL UTILITIES. CONTRACTOR SHALL REFER TO DRAWINGS OF OTHER TRADES AND VENDOR DRAWINGS FOR EMBEDDED ITEMS AND RECESSES NOT SHOWN ON STRUCTURAL DRAWINGS. PRIOR TO POURING CONCRETE THE INDEPENDENT TESTING AGENCY SHALL INSPECT ALL FOUNDATION STEEL AND FOUNDATION SUBGRADE.

10.0 STRUCTURAL STEEL:

MEET OR EXCEED MANUFACTURER'S RECOMMENDATIONS.

A. UNLESS OTHERWISE NOTED, ALL DETAILING, FABRICATION AND PLACING OF REINFORCING STEEL SHALL CONFORM TO THE MANUAL OF STANDARD PRACTICE FOR DETAILING REINFORCED CONCRETE STRUCTURES (ACI 315).

B. ALL REINFORCING STEEL SHALL BE NEW BILLET STEEL, CONFORMING TO ASTM A-615, GRADE 60, DEFORMED.

C. HEATING AND WELDING OF BARS IS PROHIBITED WITH THE EXCEPTION OF WRITTEN APPROVAL BY THE STRUCTURAL ENGINEER.

D. ALL REINFORCEMENT BARS TO BE FREE FROM LOOSE RUST AND SCALE.

E. UNLESS OTHERWISE NOTED, ALL REINFORCEMENT SHALL HAVE A MINIMUM CONCRETE COVERAGE OF 3 INCHES. THIS MAY REQUIRE SPACERS AND CHAIRS AS REQUIRED BY TESTING AGENCY OR CONSTRUCTION MANAGER.

F. SPLICES IN REINFORCEMENT STEEL ARE PROHIBITED, UNLESS APPROVED BY CONSTRUCTION MANAGER. ALL SPLICES MUST THEN MEET ALL APPLICABLE ASTM STANDARDS FOR SPLICING.

11.0 GROUNDING:

MEET ALL APPLICABLE CODES, REQUIREMENTS OF THE CONSTRUCTION DOCUMENTS AND AT&T WIRELESS CONSTRUCTION SPECIFICATIONS.

GENERATOR SPECIFICATIONS:

1. SWITCHES AND STANDARD FEATURES.
   - A. CYCLIC CRANKING.
   - B. ALARM HORN WITH SILENCING SWITCH.
   - C. VOLTAGE ADJUSTING RHEOSTAT.
   - D. OVERVOLTAGE PROTECTION.
   - E. REMOTE TWO-WIRE AUTO START SYSTEM.
   - F. LAMP TEST SWITCH.
   - G. RUN-OFF-RESET/AUTO SWITCH (ENGINE START).
   - H. ENGINE COOL DOWN TIMER (5 MINUTES).
2. ERROR-PROOF WIRING HARNESS FOR ELECTRICAL CONNECTIONS.
3. PANEL LAMPS.
4. DC CIRCUIT PROTECTION.

UNIT ACCESSORIES:

1. WEATHER HOUSING-STANDARD WITH ROOF MOUNTED SILENCER.
2. MOUNTED CRITICAL GRADE EXHAUST SILENCER.
3. TAIL PIPE AND RAIN CAP.

COOLING SYSTEM ACCESSORIES:

1. UNIT MOUNTED RADIATOR.
2. ENGINE BLOCK HEATER.

FUEL SYSTEM ACCESSORIES:

1. FLEXIBLE FUEL LINES.
2. ENGINE BLOCK HEATER.
3. SUBBASE FUEL TANK-172 GALLONS.
4. DOUBLE WALL CONSTRUCTION WITH LEAK DETECTION MONITOR.
5. U.L. 142 LISTED.
6. FUEL LEVEL GAUGE.
7. LOW FUEL LEVEL ALARM.
8. FILL PIPE EXTENDED 10% INTO TANK.
9. HIGH-FUEL LEVEL ALARM-SET AT 95%.
10. 7.5 GALLON LOCKABLE FILL WITH SPILL CONTAINMENT.

ANTENNA & COAX NOTES:

1. VERIFY EACH CABLE LENGTH, DIAMETER, ROUTING, COLOR CODING AND ALL APPURTENANCES.
2. THE MAXIMUM COAXIAL CABLE LENGTH AND CORRESPONDING COAXIAL DIAMETER IS SHOWN ON A2.0. THIS CABLE LENGTH IS TO BE USED FOR FABRICATION OR CONSTRUCTION. ACTUAL CABLE LENGTH(S) MUST BE VERIFIED. COAXIAL CABLE SHALL BE PROVIDED BY AT&T.
3. ALL COAX CABLES SHALL UTILIZED GROUND KITS, GROUNDED AS FOLLOWS:
   - A. NEAR ANTENNA RAD CENTER ELEVATION.
   - B. MIDDLE OF TOWER (MID-HEIGHT OF ANTENNA), IF CABLE RUN IS OVER 200'-0".
   - C. BOTTOM OF TOWER.
   - D. AT MASTER GROUND BAR 3'-0" FROM MMBS-BBU CABINET.
4. ALL TOP JUMPERS SHALL BE LENGTHS AS SHOWN AND INSTALLED BY CONTRACTOR.
5. ALL CABLES SHALL BE COLOR CODED AS SHOWN ON SHEET RF1.0 AN IN ACCORDANCE WITH AT&T SPECIFICATIONS.
6. BANDING SHALL BE IN ACCORDANCE WITH SHEET A2.0, RF1.0 AND AS FOLLOWS:
   - A. MAIN LINE COLOR BANDS SHALL BE 2" WIDE. MAINTAIN 1" SPACING BETWEEN COLORS.
   - B. FREQUENCY COLOR BANDS SHALL BE 2" WIDE WITH NO SPACE BETWEEN COLORS.
   - C. JUMPER COLOR BANDS SHALL BE 1" WIDE WITH 1" SPACE.
   - D. START COLOR BANDS 2" BEYOND WEATHERPROOFING.
   - E. START SELECTOR COLOR NEXT TO END CONNECTORS.
7. FINAL COAXIAL ANTENNA CABLE SIZES SHALL BE DETERMINED BY AT&T RF ENGINEER. SEE ANTENNA SCHEDULE SHEET A2.0. BASE ON FINAL CABLE RUN LENGTHS DETERMINED BY AT&T.
8. SEE CONSTRUCTION MANAGER FOR ANTENNA SUPPORT ASSEMBLY TYPE.
9. ALL COAXIAL CABLE WILL BE SECURED TO THE DESIGNED SUPPORT STRUCTURE AT DISTANCES NOT TO EXCEED 3' OR THE CABLE MANUFACTURES SPECIFICATIONS WHICHEVER IS LESS. WITH HARDWARE SPECIFIED IN THE COAXIAL CABLE ROUTING DETAILS OF THE SUPPLIED STRUCTURAL REPORT BY OTHERS.
10. PROVIDE AT LEAST 6" OF SLACK IN THE MAIN COAXIAL CABLES AT THE ANTENNA MOUNTING ELEVATION TO PROVIDE FOR FUTURE CONNECTOR REPLACEMENT.

PREPARED FOR:

at&t

AT&T MOBILITY
1801 VALLEY VIEW LANE
FARMERS BRANCH, TX 75234

TILLMAN INFRASTRUCTURE

SITE NAME:
ATC GS ICE HOUSE RELO
SITE NUMBER:
HX0713 (HX0549)
SITE ADDRESS:
6911 HWY 225
DEER PARK, TX 77536
HARRIS COUNTY

STATE OF TEXAS
DAVID J. HILDEBRANDT
106713
LICENSED
PROFESSIONAL ENGINEER
11/6/18

LEVEL 5 CONSULTING ENGINEERS, INC.
19315 FM 2252, STE. 301 PH: (210) 542-5911
GARDEN RIDGE, TX 78266 F-13646

DRAWN BY:	IL
APPROVED BY:	TH
DATE DRAWN:	04/23/18

REVISION

NO	DESCRIPTION	BY	DATE
0	ISSUED FOR CONSTRUCTION	IL	04/23/18
1	NEW RFDS	IL	03/14/18
2	NEW RFDS	WS	11/07/18

SHEET TITLE:
GENERAL NOTES

SHEET NUMBER:
N1.2

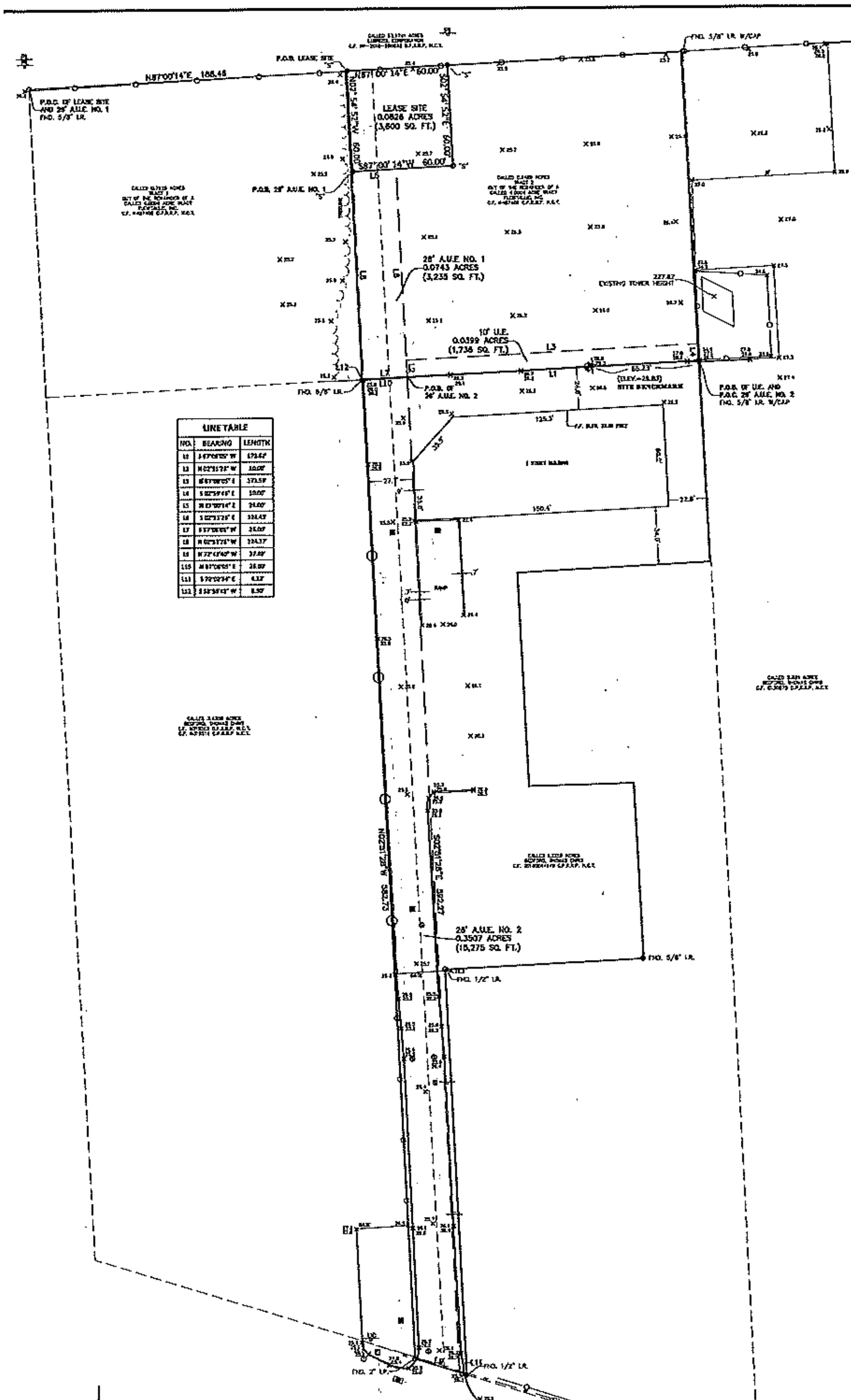

LINE TABLE

NO.	BEARING	LENGTH
L1	S87°08'05"W	173.62'
L2	N02°51'28"W	10.00'
L3	N87°08'05"E	173.59'
L4	S02°59'46"E	10.00'
L5	N87°00'14"E	26.00'
L6	S02°51'28"E	124.43'
L7	S87°08'05"W	26.00'
L8	N02°51'28"W	124.37'
L9	N72°13'40"W	27.49'
L10	N87°08'05"E	26.00'
L11	S70°02'34"E	4.33'
L12	S58°55'43"W	0.90'

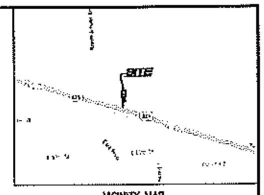

VICINITY MAP
N.T.S.

10' UTILITY EASEMENT (U.E.) DESCRIPTION

Being a 0.0399 acres (1,736 square feet) of land situated in the George Ross Survey, A-646 of Harris County, Texas being out of a called 0.8459 acre tract of land (Tract 2) out of the remainder of a called 4.0004 acre tract of land as described in an instrument to Flexitalic, Inc., recorded under Clerk's File (C.F.) Number N487406 of the Official Public Records of Real Property Harris County, Texas (O.P.R.R.P. H.C.T.) said 0.0399 acre tract of land being more particularly described by metes and bounds as follows:

BEGINNING at a 5/8 inch iron rod with cap found for the southeast corner of said 0.8459 acre tract and the herein described tract, same being the northeast corner of a called 1.3259 acre tract of land as described in an instrument to Thomas Chris Bedford, recorded under C.F. 20100044449 of the O.P.R.R.P. H.C.T., lying on the west line of a called 2.821 acre tract of land as described in an instrument to Thomas Chris Bedford, recorded under C.F. G130870 of the O.P.R.R.P. H.C.T.;

THENCE South 87°08'05" West, along and with the south line of said 0.8459 acre tract and the north line of said 1.3259 acre tract, a distance of 173.62 feet to a point for the southwest corner of the herein described tract, lying on the east line of an access and utility easement;

THENCE North 02°51'28" West, along and with the east line of said access and utility easement, a distance of 10.00 feet to a point for the northwest corner of the herein described tract;

THENCE North 87°08'05" East, a distance of 173.59 feet to a point for the northeast corner of the herein described tract, lying on the east line of said 0.8459 acre tract and the west line of said 2.821 acre tract;

THENCE South 02°59'46" East, along and with the east line of said 0.8459 acre tract and the west line of said 2.821 acre tract, a distance of 10.00 to the POINT OF BEGINNING and containing a computed 0.0399 acres (1,736 square feet) of land.

26' ACCESS AND UTILITY EASEMENT (A.U.E.) NO. 1 DESCRIPTION

Being a 0.0743 acres (3,235 square feet) of land situated in the George Ross Survey, A-646 of Harris County, Texas being out of a called 0.8459 acre tract of land (Tract 2) out of the remainder of a called 4.0004 acre tract of land as described in an instrument to Flexitalic, Inc., recorded under Clerk's File (C.F.) Number N487406 of the Official Public Records of Real Property Harris County, Texas (O.P.R.R.P. H.C.T.), said 0.0743 acre tract of land being more particularly described by metes and bounds as follows:

COMMENCING at a 5/8 inch iron rod found for the northeast corner of a called 0.7325 acre tract of land (Tract 1) out of the remainder of a called 4.0004 acre tract of land as described in an instrument to Flexitalic, Inc., recorded under C.F. N487406 of the O.P.R.R.P. H.C.T., same being an interior corner of a called 53.6741 acre tract of land as described in an instrument to Lubrizol Corporation, recorded under C.F. RP-2015-250832 of the O.P.R.R.P. H.C.T.;

THENCE North 87°00'14" East, along and with the north line of said 0.7325 acre and a south line of said 53.6741 acre tract, a distance of 168.48 feet to a 5/8 inch iron rod with cap stamped "Landpoint 10194172" set for the northwest corner of a Lease Site;

THENCE South 02°54'32" East, along and with the west line of said Lease Site, a distance of 60.00 feet to a 5/8 inch iron rod with cap stamped "Landpoint 10194172" set for the southwest corner of said Lease Site and the POINT OF BEGINNING of the herein described tract;

THENCE North 87°00'14" East, along and with the south line of said Lease Site, a distance of 26.00 feet to a point for the northeast corner of the herein described tract;

THENCE South 02°51'28" East, a distance of 124.43 feet to the southeast corner of the herein described tract, same being the southwest corner of a 10' utility easement and a northeast corner of a 26' access and utility easement no. 2, lying on the south line of said 0.8459 acre tract and the north line of a called 1.3259 acre tract of land as described in an instrument to Thomas Chris Bedford, recorded under C.F. 20100044449 of the O.P.R.R.P. H.C.T.;

THENCE South 87°08'05" West, along and with the south line of said 0.8459 acre tract and the north line of said 1.3259 acre tract, a distance of 26.00 feet to the southwest corner of the herein described tract, same being the northwest corner of said 26' access and utility easement no. 2 from which a 5/8 inch iron rod found bears South 58°55'43" West, 0.90 feet;

THENCE North 02°51'28" West, a distance of 124.38 feet to the POINT OF BEGINNING and containing a computed 0.0743 acres (3,235 square feet) of land.

26' ACCESS AND UTILITY EASEMENT (A.U.E.) NO. 2 DESCRIPTION

Being a 0.3507 acres (15,275 square feet) of land situated in the George Ross Survey, A-646 of Harris County, Texas being out of a called 1.3259 acre tract of land as described in an instrument to Thomas Chris Bedford, recorded under Clerk's File (C.F.) Number 20100044449 of the Official Public Records of Real Property Harris County, Texas (O.P.R.R.P. H.C.T.), said 0.3507 acre tract of land being more particularly described by metes and bounds as follows:

COMMENCING at a 5/8 inch iron rod with cap found for the southeast corner of a called 0.8459 acre tract of land (Tract 2) out of the remainder of a called 4.0004 acre tract of land as described in an instrument to Flexitalic, Inc., recorded under (C.F.) N487406 of the O.P.R.R.P. H.C.T., same being the northeast corner of said 1.3259 acre tract, lying on the west line of a called 2.821 acre tract of land as described in an instrument to Thomas Chris Bedford, recorded under C.F. G130870 of the O.P.R.R.P. H.C.T.;

THENCE South 87°08'05" West, along and with the south line of said 0.8459 acre tract and the north line of said 1.3259 acre tract, a distance of 173.62 feet to a point for the northwest corner and POINT OF BEGINNING of the herein described tract and the southeast corner of a 26' access and utility easement no. 1, same being the southwest corner of a 10' utility easement;

THENCE South 02°51'28" East, over and across said 1.3259 acre tract, a distance of 592.27 feet to a point for the southeast corner of the herein described tract, lying on the north right-of-way line of State Highway 225 Service Road (right-of-way varies) from which a 1/2 inch iron rod found for the most southerly southeast corner of said 1.3259 acre tract bears South 70°02'34" East, 4.33 feet;

THENCE North 72°13'40" West, along and with the north right-of-way line of said State Highway 225 Service Road, a distance of 27.49 feet to a 2 inch iron pipe found for the southwest corner of said 1.3259 acre tract and the herein described tract, same being the southeast corner of a called 3.4326 acre tract of land as described in an instrument to Thomas Chris Bedford, recorded under C.F. N316515 of the O.P.R.R.P. H.C.T.;

THENCE North 02°51'28" West, a distance of 582.73 feet to the northwest corner of the herein described tract, same being the southwest corner of said 26' access and utility easement no. 1, lying on the north line of said 1.3259 acre tract and the south line of said 0.8459 acre tract from which a 5/8 inch iron rod found bears South 58°55'43" West, 0.90 feet;

THENCE North 87°08'05" East, along and with the north line of said 1.3259 acre tract and the south line of said 0.8459 acre a distance of 26.00 feet to the POINT OF BEGINNING and containing a computed 0.3507 acres (15,275 square feet) of land.

LEASE SITE DESCRIPTION

Being a 0.0826 acres (3,600 square feet) of land situated in the George Ross Survey, A-646 of Harris County, Texas being out of a called 0.8459 acre tract of land (Tract 2) out of the remainder of a called 4.0004 acre tract of land as described in an instrument to Flexitalic, Inc., recorded under Clerk's File (C.F.) Number N487406 of the Official Public Records of Real Property Harris County, Texas (O.P.R.R.P. H.C.T.), said 0.0826 acre tract of land being more particularly described by metes and bounds as follows:

COMMENCING at a 5/8 inch iron rod found for the northeast corner of a called 0.7325 acre tract of land (Tract 1) out of the remainder of a called 4.0004 acre tract of land as described in an instrument to Flexitalic, Inc., recorded under Clerk's File (C.F.) Number N487406 of the Official Public Records of Real Property Harris County, Texas (O.P.R.R.P. H.C.T.), same being an interior corner of a called 53.6741 acre tract of land as described in an instrument to Lubrizol Corporation, recorded under C.F. RP-2015-250832 of the O.P.R.R.P. H.C.T.;

THENCE North 87°00'14" East, along and with the north line of said 0.7325 acre and a south line of said 53.6741 acre tract, a distance of 168.48 feet to a 5/8 inch iron rod with cap stamped "Landpoint 10194172" set for the northwest corner of the herein described tract;

THENCE North 87°00'14" East, continuing along and with the north line of said 0.7325 acre and a south line of said 53.6741 acre tract, a distance of 60.00 feet to a 5/8 inch iron rod with cap stamped "Landpoint 10194172" set for the northeast corner of the herein described tract;

THENCE South 02°54'32" East, over and across said 0.8459 acre tract, a distance of 60.00 feet to a 5/8 inch iron rod with cap stamped "Landpoint 10194172" set for the southeast corner of the herein described tract;

THENCE South 87°00'14" West, a distance of 60.00 feet to a 5/8 inch iron rod with cap stamped "Landpoint 10194172" set for the southwest corner of the herein described tract, same being the northwest corner of an access and utility easement;

THENCE North 02°54'32" West, a distance of 60.00 to the POINT OF BEGINNING and containing a computed 0.0826 acres (3,600 square feet) of land.

SURVEY OF

A PROPOSED LEASE SITE
0.0826 ACRES (3,600 SQ. FT.),
26' ACCESS & UTILITY EASEMENT NO. 1
0.0743 ACRES (3,235 SQ. FT.),
26' ACCESS & UTILITY EASEMENT NO. 2
0.3507 ACRES (15,275 SQ. FT.),
AND 10' UTILITY EASEMENT
0.0399 ACRES (1,736 SQ. FT.)
SITUATED IN THE
GEORGE ROSS SURVEY, A-646
HARRIS COUNTY, TEXAS

GRAPHIC SCALE

(IN FEET)
1 inch = 30 ft.

SITE BENCHMARK

CUT SQUARE ELEV.= 24.83 FEET (GEOID 12)

BENCHMARK IS A CUT SQUARE ON A BACK OF CURB, LOCATED FROM THE NORTHEAST CORNER OF A CALLED 1.3259 ACRE TRACT, FROM WHICH IT BEARS S87°08'05"W, 69.23 FEET, AS SHOWN HEREON.

LEGEND / ABBREVIATIONS

A	ABSTRACT
A.U.E.	ACCESS AND UTILITY EASEMENT
B.L.	CLERK'S FILE
C.F.	ELEVATION
ELEV.	FOUND
F.F.	FINISH FLOOR
FND.	IRON ROD
I.R.	IRON PIPE
I.P.	OFFICIAL PUBLIC RECORDS OF REAL PROPERTY, HARRIS COUNTY, TEXAS
O.P.R.R.P. H.C.T.	MAP RECORDS OF HARRIS COUNTY, TEXAS
P.O.B.	POINT OF BEGINNING
P.O.C.	POINT OF COMMENCING
R.O.W.	RIGHT-OF-WAY
U.E.	UTILITY EASEMENT
"S"	SET 5/8" IRON ROD W/CAP STAMPED "LANDPOINT 10194172"
CHAIN LINK	
POWER POLE	
OVERHEAD LINE	
GRATE INLET	
STORM MANHOLE	
PIPELINE MARKER	
PROPERTY MARKER	
UNDERGROUND CABLE	
SIGN	

To Level 5 Consulting:

I certify that this survey was made on the ground, that this plat correctly represents the facts found at the time of survey and that this professional service substantially conforms to the current Texas Society of Professional Surveyors Standards and Specifications.

Jay Dean [illegible]
Registered Professional Land Surveyor
Texas Registration No. 4345
March 15, 2018

NOTES:

1. Elevations based on GEOID12 using one VRS network.
2. Bearings based on Texas State Plane Coordinate System, South Central Zone, North American Datum 1983 (NAD83).
3. This survey was prepared without the benefit of a title commitment or other abstracting and may not reflect all items of record.

PROJECT INFORMATION

SITE NAME	10079852
OWNER'S NAME	THOMAS CHRIS BEDFORD
SITE ADDRESS	0 HIGHWAY 225, DEER PARK, TEXAS 77536

	NAD 27	NAD 83	ELEV.
LATITUDE	29°42'31.06" N / 29.708628	29°42'31.49" N / 29.708858	28'
LONGITUDE	95°05'53.73" W / 95.098273	95°05'54.54" W / 95.098483	

FLOOD NOTE

This site is situated in Zone "X" in Harris County, Texas according to FEMA map number 48201C0630M dated January 6, 2017. Worthy: This statement does not imply that the property and/or the structures thereon will be free from flooding or flood damage. This determination has been made by scaling the property on the referenced map and is not the result of an elevation survey. This flood statement shall not create liability on the part of the surveyor.

FIELD BOOK	[illegible]
FIELD WORK	J.F.
DATE	3-14-18
DRAWING	A.S.
DATE	3-14-18
CHECKED	S.S.
DATE	3-15-18
MIDE. CO.	
SKILL CO.	
CF. NO.	
SCALE	1" = 30'
REV. MAP	
JOB NO.	18-0309

LANDPOINT
Formerly TOWN AND COUNTRY SURVEYORS
2219 SAWDUST ROAD, STE. 2003
THE WOODLANDS, TX 77380
(281)465-8730
www.landpoint.net
TBPLS FIRM NO. 10194172
SHEET 1 OF 1

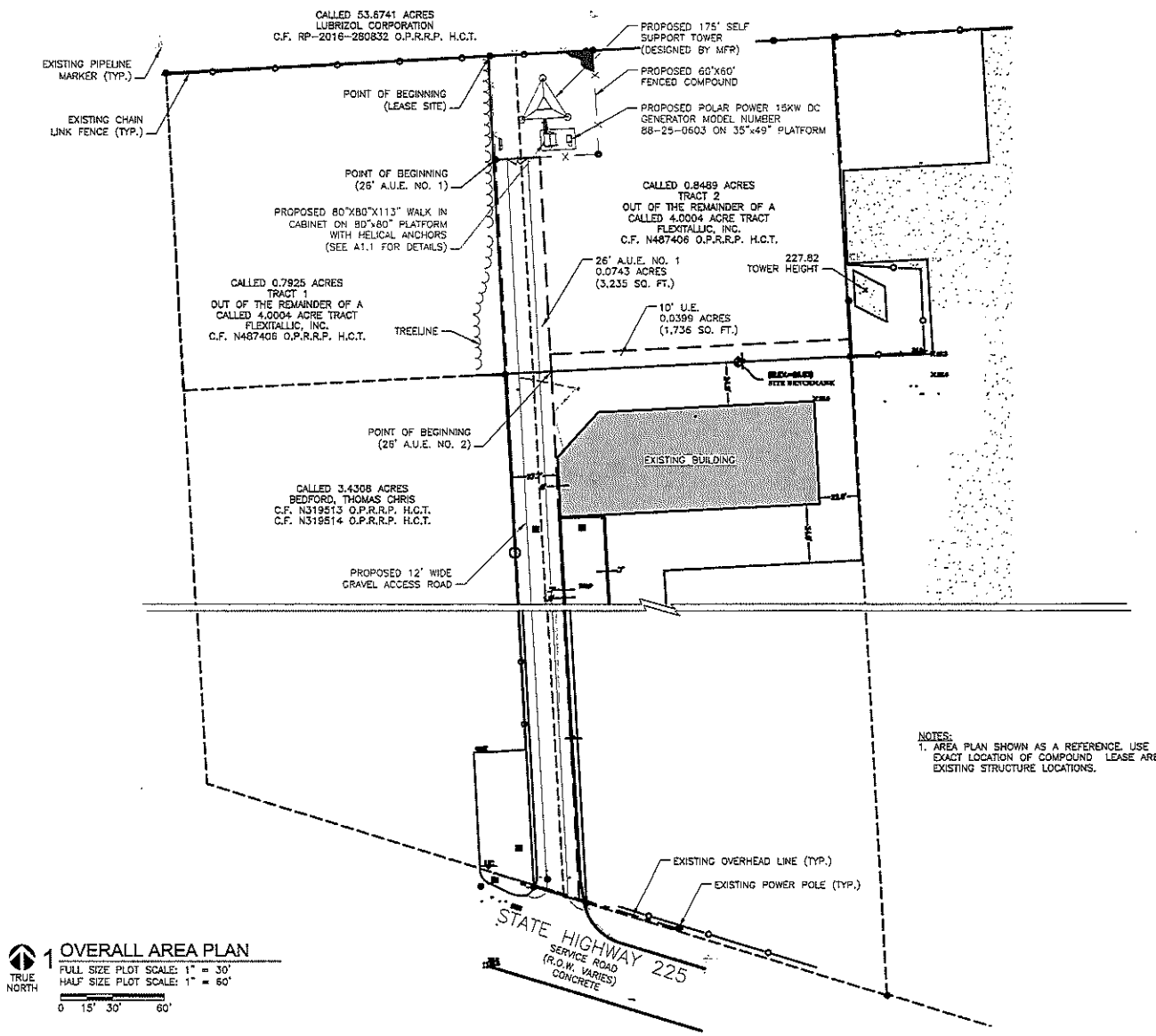

NOTES:
1. AREA PLAN SHOWN AS A REFERENCE. USE BOUNDARY SURVEY FOR EXACT LOCATION OF COMPOUND LEASE AREA, EASEMENTS, AND EXISTING STRUCTURE LOCATIONS.

1 OVERALL AREA PLAN

TRUE NORTH

FULL SIZE PLOT SCALE: 1" = 30'
HALF SIZE PLOT SCALE: 1" = 60'

0 15' 30' 60'

PREPARED FOR:

at&t

AT&T MOBILITY
1801 VALLEY VIEW LANE
FARMERS BRANCH, TX 75234

TILLMAN INFRASTRUCTURE

SITE NAME:
ATC GS ICE HOUSE RELO

SITE NUMBER:
HX0713 (HX0549)

SITE ADDRESS:
5911 HWY 225
DEER PARK, TX 77536
HARRIS COUNTY

STATE OF TEXAS
DAVID J. HILDEBRANDT
106713
LICENSED
PROFESSIONAL ENGINEER
11/6/18

LEVEL 5 CONSULTING ENGINEERS, INC.
19315 FM 2252, STE. 301
GARDEN RIDGE, TX 78266
PH: (210) 542-5911
F-13646

DRAWN BY:	IL
APPROVED BY:	TH
DATE DRAWN:	04/23/18

REVISION

NO	DESCRIPTION	BY	DATE
0	ISSUED FOR CONSTRUCTION	IL	04/23/18
1	NEW RFDS	IL	03/14/18
2	NEW RFDS	WS	11/07/18

SHEET TITLE:
OVERALL AREA PLAN

SHEET NUMBER:
A0.0

NOTES:
1. INSTALL 3/4" WHITE WASH #57 STONE INSIDE THE FENCED COMPOUND
2. INSTALL 3' WIDE SEED STRAW AROUND THE COMPOUND AND GRASS SEEDING OUTSIDE OF THE COMPOUND WHERE THE SOIL WAS DISTURBED.
3. INSTALL METAL EDGING INSIDE THE COMPOUND FENCE ALONG THE BOTTOM TO HELP KEEP THE 3/4" WHITE WASH #57 STONE INSIDE THE COMPOUND AREA.
4. ADD E911 ADDRESS TO THE METER BANK. THE LETTERING NEEDS TO BE A MINIMUM OF 2" TALL. LABEL EACH METER BEING USED STARTING WITH A-TILLMAN AND B-AT&T.

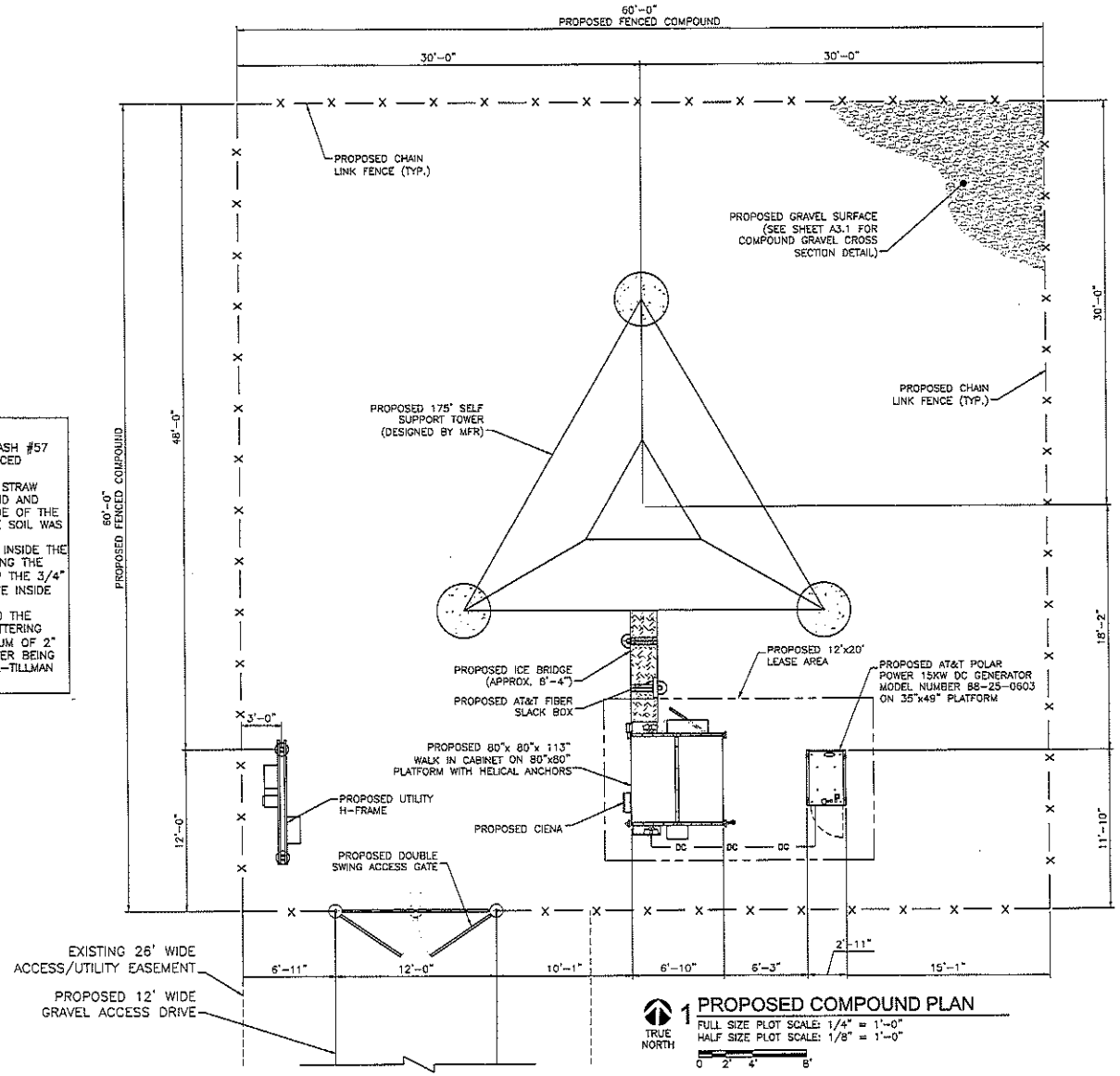

1 PROPOSED COMPOUND PLAN

TRUE NORTH

FULL SIZE PLOT SCALE: 1/4" = 1'-0"
HALF SIZE PLOT SCALE: 1/8" = 1'-0"

0 2' 4' 8'

PREPARED FOR:

at&t

AT&T MOBILITY
1801 VALLEY VIEW LANE
FARMERS BRANCH, TX 75234

TILLMAN INFRASTRUCTURE

SITE NAME:
ATC GS ICE HOUSE RELO

SITE NUMBER:
HX0713 (HX0549)

SITE ADDRESS:
6911 HWY 225
DEER PARK, TX 77536
HARRIS COUNTY

STATE OF TEXAS
DAVID J. HILDEBRANDT
106713
LICENSED
PROFESSIONAL ENGINEER
11/6/18

LEVEL 5 CONSULTING ENGINEERS, INC.
19315 FM 2252, STE. 301
GARDEN RIDGE, TX 78266
PH: (210) 542-5911
F-13646

DRAWN BY:	IL
APPROVED BY:	TH
DATE DRAWN:	04/23/18

REVISION

NO	DESCRIPTION	BY	DATE
0	ISSUED FOR CONSTRUCTION	IL	04/23/18
1	NEW RFDS	IL	03/14/18
2	NEW RFDS	WS	11/07/18

SHEET TITLE:
PROPOSED COMPOUND PLAN

SHEET NUMBER:
A1.0

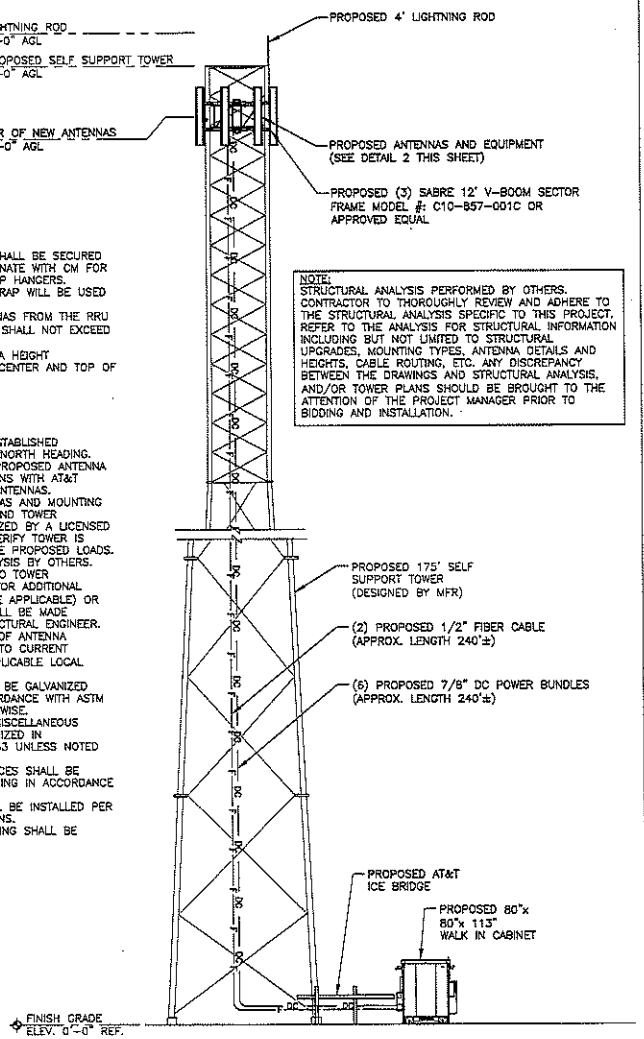

ANTENNA CABLE NOTES:

1. ALL FIBER AND DC CABLES SHALL BE SECURED USING ROSENBERGER. COORDINATE WITH CM FOR APPROVED SNAP-IN OR CLAMP HANGERS.
2. WHERE APPLICABLE, VAPOR WRAP WILL BE USED TO SEAL ALL CONNECTIONS.
3. ALL JUMPERS TO THE ANTENNAS FROM THE RRU WILL BE 1/2" JUMPERS AND SHALL NOT EXCEED 6'-0".
4. UPON COMPLETION, PROVIDE A HEIGHT VERIFICATION DEPICTING RAD CENTER AND TOP OF ANTENNA.

ANTENNA MOUNTING NOTES:

1. ALL AZIMUTHS ARE TO BE ESTABLISHED CLOCKWISE FROM THE TRUE NORTH HEADING.
2. CONTRACTOR SHALL VERIFY PROPOSED ANTENNA RAD CENTER AND ORIENTATIONS WITH AT&T PRIOR TO INSTALLATION OF ANTENNAS.
3. PRIOR TO ATTACHING ANTENNAS AND MOUNTING SECTIONS, EXISTING TOWER AND TOWER FOUNDATION MUST BE ANALYZED BY A LICENSED STRUCTURAL ENGINEER TO VERIFY TOWER IS CAPABLE OF SUPPORTING THE PROPOSED LOADS. REFER TO STRUCTURAL ANALYSIS BY OTHERS.
4. CONTRACTOR SHALL REFER TO TOWER STRUCTURAL CALCULATIONS FOR ADDITIONAL LOADS. NO ERECTION (WHERE APPLICABLE) OR MODIFICATION OF TOWER SHALL BE MADE WITHOUT APPROVAL OF STRUCTURAL ENGINEER.
5. DESIGN AND CONSTRUCTION OF ANTENNA SUPPORTS SHALL CONFORM TO CURRENT ANSI/TIA/EIA-222-F OR APPLICABLE LOCAL CODES.
6. ALL STEEL MATERIALS SHALL BE GALVANIZED AFTER FABRICATION IN ACCORDANCE WITH ASTM A123, UNLESS NOTED OTHERWISE.
7. ALL BOLTS, ANCHORS AND MISCELLANEOUS HARDWARE SHALL BE GALVANIZED IN ACCORDANCE WITH ASTM A153 UNLESS NOTED OTHERWISE.
8. DAMAGED GALVANIZED SURFACES SHALL BE REPAIRED BY COLD GALVANIZING IN ACCORDANCE WITH ASTM A780.
9. ALL ANTENNA MOUNTS SHALL BE INSTALLED PER MANUFACTURER SPECIFICATIONS.
10. MINIMUM HORIZONTAL SPACING SHALL BE 3'-0" BETWEEN ANTENNAS.

NOTE:
STRUCTURAL ANALYSIS PERFORMED BY OTHERS. CONTRACTOR TO THOROUGHLY REVIEW AND ADHERE TO THE STRUCTURAL ANALYSIS SPECIFIC TO THIS PROJECT. REFER TO THE ANALYSIS FOR STRUCTURAL INFORMATION INCLUDING BUT NOT LIMITED TO STRUCTURAL UPGRADES, MOUNTING TYPES, ANTENNA DETAILS AND HEIGHTS, CABLE ROUTING, ETC. ANY DISCREPANCY BETWEEN THE DRAWINGS AND STRUCTURAL ANALYSIS, AND/OR TOWER PLANS SHOULD BE BROUGHT TO THE ATTENTION OF THE PROJECT MANAGER PRIOR TO BIDDING AND INSTALLATION.

1 PROPOSED TOWER ELEVATION
SCALE: N.T.S.

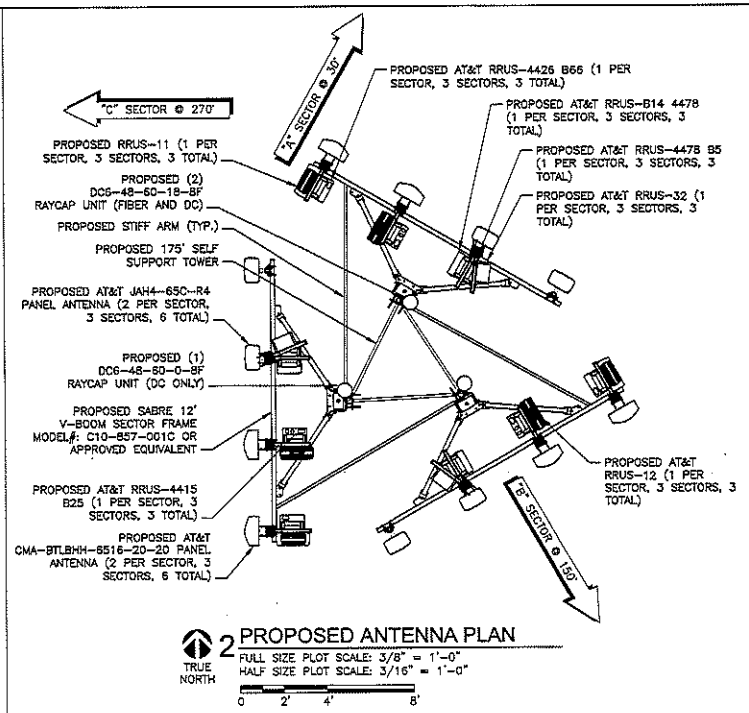

2 PROPOSED ANTENNA PLAN
FULL SIZE PLOT SCALE: 3/8" = 1'-0"
HALF SIZE PLOT SCALE: 3/16" = 1'-0"

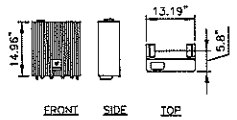

MANUFACTURER: ERICSSON
MODEL: RRUS-4426 B66
WEIGHT, EXCL. MOUNTING HARDWARE: 48.4 LBS (22 KG)
DIMENSIONS: HxWxD: 14.96"x13.19"x5.8"

3 RRUS-4426 B66
SCALE: N.T.S.

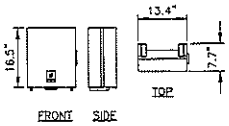

MANUFACTURER: ERICSSON
MODEL: RRUS-4478 B5
WEIGHT, EXCL. MOUNTING HARDWARE: 59.9 LBS (27.2 KG)
DIMENSIONS: HxWxD: 16.5"x13.4"x7.7"

4 RRUS-4478 B5
SCALE: N.T.S.

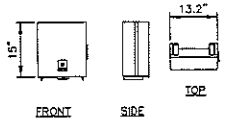

MANUFACTURER: ERICSSON
MODEL: RRUS-4478 B14
WEIGHT, EXCL. MOUNTING HARDWARE: 59.4 LBS (27 KG)
DIMENSIONS: HxWxD: 15"x13.2"x7.3"

5 RRUS-4478 B14
SCALE: N.T.S.

PREPARED FOR:

at&t

AT&T MOBILITY
1801 VALLEY VIEW LANE
FARMERS BRANCH, TX 75234

TILLMAN INFRASTRUCTURE

SITE NAME:
ATC GS ICE HOUSE RELO
SITE NUMBER:
HX0713 (HX0549)
SITE ADDRESS:
6911 HWY 225
DEER PARK, TX 77536
HARRIS COUNTY

STATE OF TEXAS
DAVID J. HILDEBRANDT
106713
LICENSED
PROFESSIONAL ENGINEER
11/6/18

LEVELS CONSULTING ENGINEERS, INC.
19315 FM 2252, STE. 301
GARDEN RIDGE, TX 78266
PH: (210) 542-5911
F-13646

DRAWN BY:	IL
APPROVED BY:	TH
DATE DRAWN:	04/23/18

REVISION

NO	DESCRIPTION	BY	DATE
0	ISSUED FOR CONSTRUCTION	IL	04/23/18
1	NEW RFDS	IL	03/14/18
2	NEW RFDS	WS	11/07/18

SHEET TITLE:
PROPOSED TOWER ELEVATION AND ANTENNA PLAN

SHEET NUMBER:
A2.0

Section 17A - FINAL TOWER CONFIGURATION - SECTOR A (OR OMNI)

ANTENNA POSITION is LEFT to RIGHT from BACK OF ANTENNA (unless otherwise specified)	ANTENNA POSITION 1		ANTENNA POSITION 2		ANTENNA POSITION 3		ANTENNA POSITION 4		ANTENNA POSITION 5	
ANTENNA MAKE - MODEL	CMA-BTLBHH/6516/20/20/A15_RET		CMA-BTLBHH/6516/20/20/A15_RET		JAH4-65C-R4		JAH4-65C-R4			
ANTENNA VENDOR	CMA		CMA		COMMSCOPE		COMMSCOPE			
ANTENNA SIZE (H x W x D)	72X16.2X7.5		72X16.2X7.5		96X13.8X8.2		96X13.8X8.2			
ANTENNA WEIGHT	88		88		67.2		67.2			
AZIMUTH	30		30		30		30			
MAGNETIC DECLINATION										
RADIATION CENTER (feet)	168		168		168		168			
ANTENNA TIP HEIGHT										
MECHANICAL DOWNTILT										
FEEDER AMOUNT										
VERTICAL SEPARATION from ANTENNA ABOVE (TIP to TIP)										
VERTICAL SEPARATION from ANTENNA BELOW (TIP to TIP)										
HORIZONTAL SEPARATION from CLOSEST ANTENNA to LEFT (CENTERLINE to CENTERLINE)										
HORIZONTAL SEPARATION from CLOSEST ANTENNA to RIGHT (CENTERLINE to CENTERLINE)										
HORIZONTAL SEPARATION from ANOTHER ANTENNA (which antenna # / # of inches)										
Antenna RET Motor (QTY/MODEL)										
SURGE ARRESTOR (QTY/MODEL)										
DIPLEXER (QTY/MODEL)										
DUPLEXER (QTY/MODEL)										
Antenna RET CONTROL UNIT (QTY/MODEL)										
DC BLOCK (QTY/MODEL)										
TMA/LNA (QTY/MODEL)										
CURRENT INJECTORS FOR TMA (QTY/MODEL)										
PDU FOR TMAS (QTY/MODEL)										
FILTER (QTY/MODEL)										
SQUID (QTY/MODEL)										
FIBER TRUNK (QTY/MODEL)										
DC TRUNK (QTY/MODEL)										
REPEATER (QTY/MODEL)										
RRH - 700 band (QTY/MODEL)	1	RRUS-11 E 912			1	B14 4478				
RRH - 850 band (QTY/MODEL)			1	RRUS-12	1	4478 B5				
RRH - 1900 band (QTY/MODEL)			1	4415 B25						
RRH - AWS band (QTY/MODEL)	1	4426 B66								
RRH - WCS band (QTY/MODEL)					1	RRUS-32				

PREPARED FOR:

at&t

AT&T MOBILITY
1801 VALLEY VIEW LANE
FARMERS BRANCH, TX 75234

TILLMAN INFRASTRUCTURE

SITE NAME:
ATC GS ICE HOUSE RELO

SITE NUMBER:
HX0713 (HX0549)

SITE ADDRESS:
6911 HWY 225
DEER PARK, TX 77536
HARRIS COUNTY

STATE OF TEXAS
DAVID J. HILDEBRANDT
106713
LICENSED
PROFESSIONAL ENGINEER
11/6/18

LEVEL 5 CONSULTING ENGINEERS, INC.
19315 FM 2252, STE. 301
GARDEN RIDGE, TX 78266
PH: (210) 542-5911
F-13646

DRAWN BY:	IL
APPROVED BY:	TH
DATE DRAWN:	04/23/18

REVISION

NO	DESCRIPTION	BY	DATE
0	ISSUED FOR CONSTRUCTION	IL	04/23/18
1	NEW RFDS	IL	03/14/18
2	NEW RFDS	WS	11/07/18

SHEET TITLE:
ANTENNA CONFIGURATION (SECTOR A)

SHEET NUMBER:
A2.1

Section 17B - FINAL TOWER CONFIGURATION - SECTOR B

ANTENNA POSITION is LEFT to RIGHT from BACK OF ANTENNA (unless otherwise specified)	ANTENNA POSITION 1		ANTENNA POSITION 2		ANTENNA POSITION 3		ANTENNA POSITION 4		ANTENNA POSITION 5	
ANTENNA MAKE - MODEL	CMA-BTLSHH/6518/20/30/A15_RET		CMA-BTLSHH/6518/20/30/A15_RET		JAH4-65C-R4		JAH4-65C-R4			
ANTENNA VENDOR	CMA		CMA		COMMSCOPE		COMMSCOPE			
ANTENNA SIZE (H x W x D)	72X16.2X7.8		72X16.2X7.8		96X13.8X8.2		96X13.8X8.2			
ANTENNA WEIGHT	88		88		87.2		87.2			
AZIMUTH	150		150		150		150			
MAGNETIC DECLINATION										
RADIATION CENTER (feet)	168		168		168		168			
ANTENNA TIP HEIGHT										
MECHANICAL DOWNTILT										
FEEDER AMOUNT										
VERTICAL SEPARATION from ANTENNA ABOVE (TIP to TIP)										
VERTICAL SEPARATION from ANTENNA BELOW (TIP to TIP)										
HORIZONTAL SEPARATION from CLOSEST ANTENNA to LEFT (CENTERLINE to CENTERLINE)										
HORIZONTAL SEPARATION from CLOSEST ANTENNA to RIGHT (CENTERLINE to CENTERLINE)										
HORIZONTAL SEPARATION from ANOTHER ANTENNA (which antenna # / # of inches)										
Antenna RET Motor (QTY/MODEL)										
SURGE ARRESTOR (QTY/MODEL)										
DIPLEXER (QTY/MODEL)										
DUPLEXER (QTY/MODEL)										
Antenna RET CONTROL UNIT (QTY/MODEL)										
DC BLOCK (QTY/MODEL)										
TMA/LNA (QTY/MODEL)										
CURRENT INJECTORS FOR TMA (QTY/MODEL)										
PDU FOR TMAS (QTY/MODEL)										
FILTER (QTY/MODEL)										
SQUID (QTY/MODEL)										
FIBER TRUNK (QTY/MODEL)										
DC TRUNK (QTY/MODEL)										
REPEATER (QTY/MODEL)										
RRH - 700 band (QTY/MODEL)	1	RRUS-11 E B12			1	B14 4478				
RRH - 850 band (QTY/MODEL)			1	RRUS-12	1	4478 B5				
RRH - 1900 band (QTY/MODEL)			1	4415 B25						
RRH - AWS band (QTY/MODEL)	1	4426 B66								
RRH - WCS band (QTY/MODEL)					1	RRUS-32				

PREPARED FOR:

at&t

AT&T MOBILITY
1801 VALLEY VIEW LANE
FARMERS BRANCH, TX 75234

TILLMAN INFRASTRUCTURE

SITE NAME:
ATC GS ICE HOUSE RELO

SITE NUMBER:
HX0713 (HX0549)

SITE ADDRESS:
6911 HWY 225
DEER PARK, TX 77536
HARRIS COUNTY

STATE OF TEXAS
DAVID J. HILDEBRANDT
106713
LICENSED
PROFESSIONAL ENGINEER
11/6/18

LEVEL 5 CONSULTING ENGINEERS, INC.
19315 FM 2252, STE. 301
GARDEN RIDGE, TX 78266
PH: (210) 542-5911
F-13646

DRAWN BY:	IL
APPROVED BY:	TH
DATE DRAWN:	04/23/18

REVISION

NO	DESCRIPTION	BY	DATE
0	ISSUED FOR CONSTRUCTION	IL	04/23/18
1	NEW RFDS	IL	03/14/18
2	NEW RFDS	WS	11/07/18

SHEET TITLE:
ANTENNA CONFIGURATION (SECTOR B)

SHEET NUMBER:
A2.2

Section 17C - FINAL TOWER CONFIGURATION - SECTOR C

ANTENNA POSITION is LEFT to RIGHT from BACK OF ANTENNA (unless otherwise specified)	ANTENNA POSITION 1		ANTENNA POSITION 2		ANTENNA POSITION 3		ANTENNA POSITION 4		ANTENNA POSITION 5	
ANTENNA MAKE - MODEL	CMA-BTL8HH/6516/20/20/A15_RET		CMA-BTL8HH/6516/20/20/A15_RET		JAH4-65C-R4		JAH4-65C-R4			
ANTENNA VENDOR	CMA		CMA		COMMSCOPE		COMMSCOPE			
ANTENNA SIZE (H x W x D)	72X16.2X7.5		72X16.2X7.5		96X13.8X8.2		96X13.8X8.2			
ANTENNA WEIGHT	58		58		87.2		87.2			
AZIMUTH	270		270		270		270			
MAGNETIC DECLINATION										
RADIATION CENTER (feet)	168		168		168		168			
ANTENNA TIP HEIGHT										
MECHANICAL DOWNTILT										
FEEDER AMOUNT										
VERTICAL SEPARATION from ANTENNA ABOVE (TIP to TIP)										
VERTICAL SEPARATION from ANTENNA BELOW (TIP to TIP)										
HORIZONTAL SEPARATION from CLOSEST ANTENNA to LEFT (CENTERLINE to CENTERLINE)										
HORIZONTAL SEPARATION from CLOSEST ANTENNA to RIGHT (CENTERLINE to CENTERLINE)										
HORIZONTAL SEPARATION from ANOTHER ANTENNA (which antenna # / # of inches)										
Antenna RET Motor (QTY/MODEL)										
SURGE ARRESTOR (QTY/MODEL)										
DIPLEXER (QTY/MODEL)										
DUPLEXER (QTY/MODEL)										
Antenna RET CONTROL UNIT (QTY/MODEL)										
DC BLOCK (QTY/MODEL)										
TMA/LNA (QTY/MODEL)										
CURRENT INJECTORS FOR TMA (QTY/MODEL)										
PDU FOR TMAS (QTY/MODEL)										
FILTER (QTY/MODEL)										
SQUID (QTY/MODEL)										
FIBER TRUNK (QTY/MODEL)										
DC TRUNK (QTY/MODEL)										
REPEATER (QTY/MODEL)										
RRH - 700 band (QTY/MODEL)	1	RRUS-11 E B12			1	B14 4478				
RRH - 850 band (QTY/MODEL)			1	RRUS-12	1	4478 B5				
RRH - 1900 band (QTY/MODEL)			1	4415 B25						
RRH - AWS band (QTY/MODEL)	1	4426 B66								
RRH - WCS band (QTY/MODEL)					1	RRUS-32				

PREPARED FOR:

at&t

AT&T MOBILITY
1801 VALLEY VIEW LANE
FARMERS BRANCH, TX 75234

TILLMAN INFRASTRUCTURE

SITE NAME:
ATC GS ICE HOUSE RELO

SITE NUMBER:
HX0713 (HX0549)

SITE ADDRESS:
6911 HWY 225
DEER PARK, TX 77536
HARRIS COUNTY

STATE OF TEXAS
DAVID J. HILDEBRANDT
106713
LICENSED
PROFESSIONAL ENGINEER
11/6/18

LEVEL 5 CONSULTING ENGINEERS, INC.
19315 FM 2252, STE. 301
GARDEN RIDGE, TX 78266
PH: (210) 542-5911
F-13646

DRAWN BY:	IL
APPROVED BY:	TH
DATE DRAWN:	04/23/18

REVISION

NO	DESCRIPTION	BY	DATE
0	ISSUED FOR CONSTRUCTION	IL	04/23/18
1	NEW RFDS	IL	03/14/18
2	NEW RFDS	WS	11/07/18

SHEET TITLE:
ANTENNA CONFIGURATION (SECTOR C)

SHEET NUMBER:
A2.3

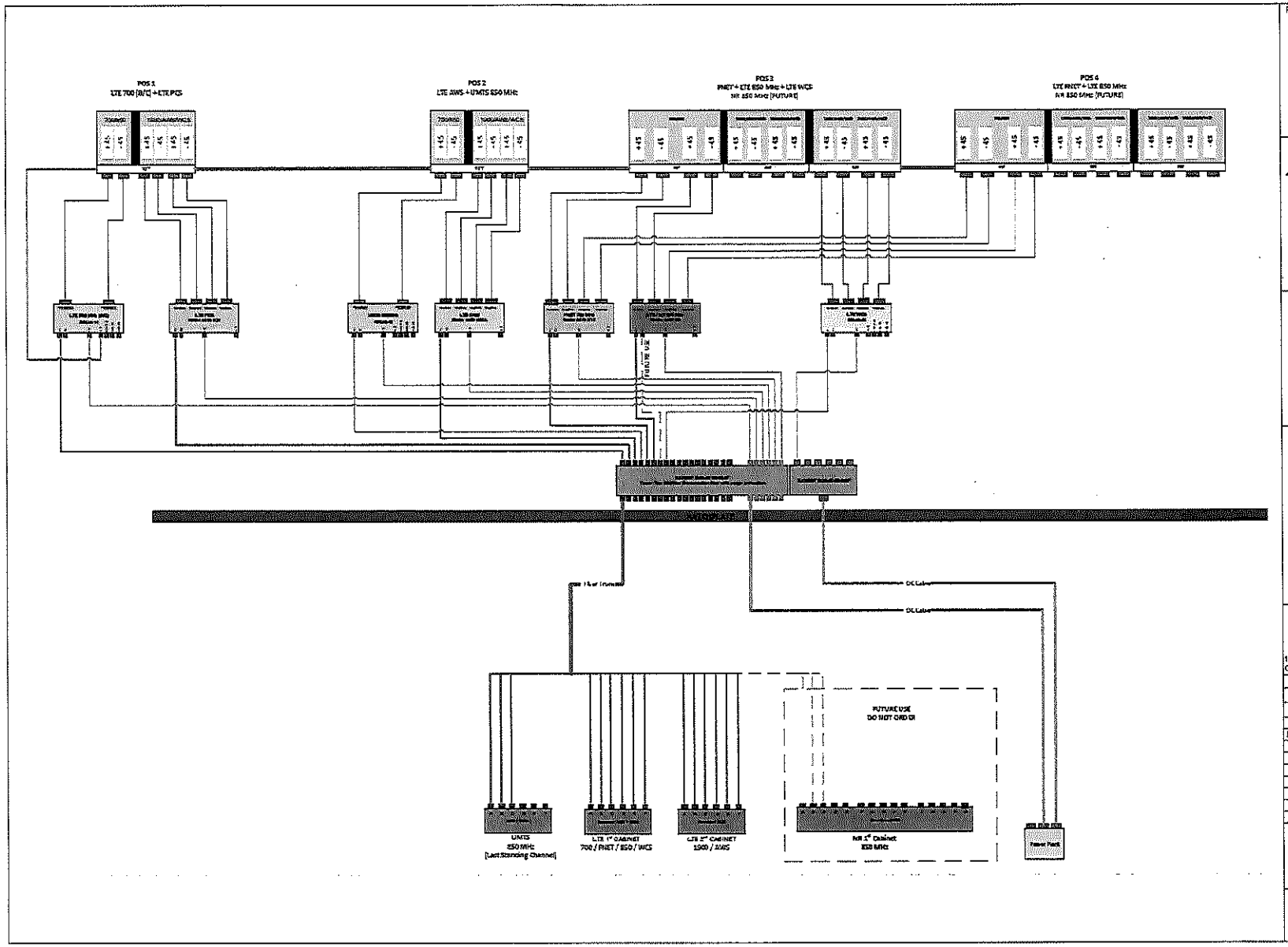

PREPARED FOR:

at&t

AT&T MOBILITY
1801 VALLEY VIEW LANE
FARMERS BRANCH, TX 75234

TILLMAN INFRASTRUCTURE

SITE NAME:
ATC GS ICE HOUSE RELO

SITE NUMBER:
HX0713 (HX0549)

SITE ADDRESS:
6911 HWY 225
DEER PARK, TX 77536
HARRIS COUNTY

STATE OF TEXAS
DAVID J. HILDEBRANDT
106713
LICENSED
PROFESSIONAL ENGINEER
11/6/18

LEVEL 5
CONSULTING ENGINEERS, INC.
19315 FM 2252, STE. 301
GARDEN RIDGE, TX 78266
PH: (210) 542-5911
F-13646

DRAWN BY:	IL
APPROVED BY:	TH
DATE DRAWN:	04/23/18

REVISION

NO	DESCRIPTION	BY	DATE
0	ISSUED FOR CONSTRUCTION	IL	04/23/18
1	NEW RFDS	IL	03/14/18
2	NEW RFDS	WS	11/07/18

SHEET TITLE:
PLUMBING DIAGRAM

SHEET NUMBER:
A2.4

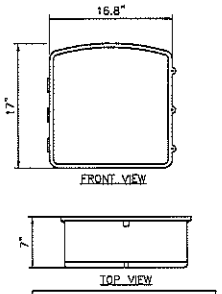

MANUFACTURER: CIENA
MODEL: CIENA 3931
WEIGHT: 28.6 LBS
DIMENSIONS: 16.8"x17.0"x7.0"

1 CIENA DETAIL
SCALE: N.T.S.

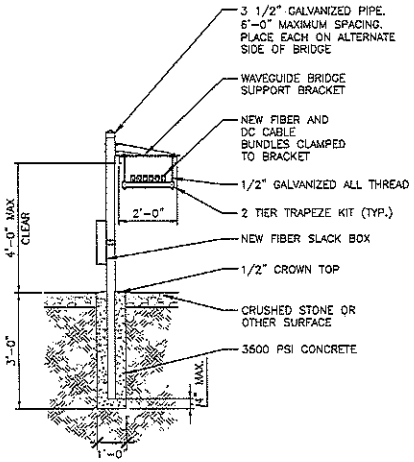

2 TYP. ICE BRIDGE DETAIL
SCALE: N.T.S.

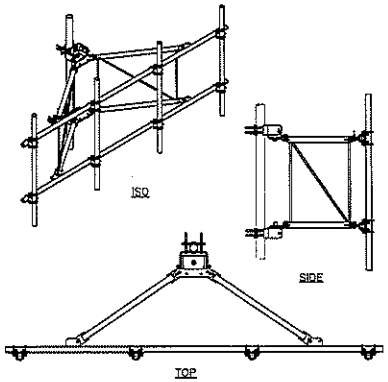

MANUFACTURER: SABRE
MODEL: C10-857-001C
WEIGHT: 501.0

3 SECTOR FRAME DETAIL
SCALE: N.T.S.

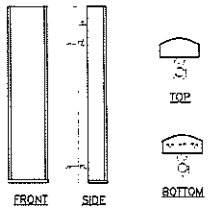

MANUFACTURER: CELLMAX
MODEL: CMA-BTLBHH6516
WEIGHT W/O MOUNTING HARDWARE: 88 LBS
DIMENSIONS: HxWxD: 72"x16.2"x7.8"
FREQUENCY: REFER TO RF DATA SHEET

4 CMA-BTLBHH6516 DETAIL
SCALE: N.T.S.

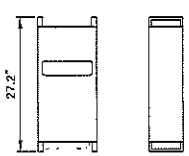

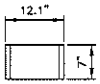

MANUFACTURER: ERICSSON
MODEL: RRUS-32 B30
WEIGHT: 53 LBS
DIMENSIONS: HxWxD: 27.2"x12.1"x7"

5 RRUS-32 DETAIL
SCALE: N.T.S.

EXTERIOR EXCESS FIBER CABLE ENCLOSURE

The RGS exterior excess fiber cable enclosure is designed for outdoor on-site storage of excess fiber cable when pre-connected fiber trunk cables are utilized.

Part #	Description	Specifications	
FB-15-ABOX CEG 10565	This aluminum enclosure can be wall, H-bracket or pipe mounted and contain up to 35 meters of 10mm fiber trunk cable	• Size: 18" wide X 18" high X 4" deep (plus mounting) • Material: Aluminum, non-painted • Protection: Weather protective • Capacity: 35 meters of 10mm cable • I/O: Cable can enter any of the 4 sides and exit any of the 3 remaining sides • Mounting: Wall, H-bracket or pipe up 3.5" OD	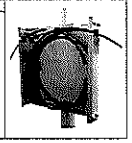

6 GROUND FIBER SLACK BOX
SCALE: N.T.S.

MANUFACTURER: PCTEL
MODEL#: GPS-TMG-HR-26NCM
DIMENSIONS: 5.0"H x 3.2"D
WEIGHT: 0.6 LBS.

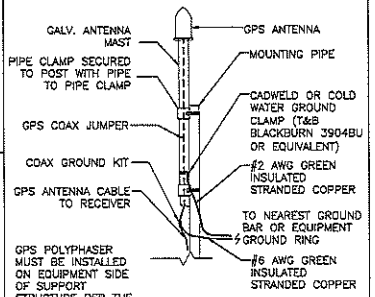

7 GPS ANTENNA DETAIL
SCALE: N.T.S.

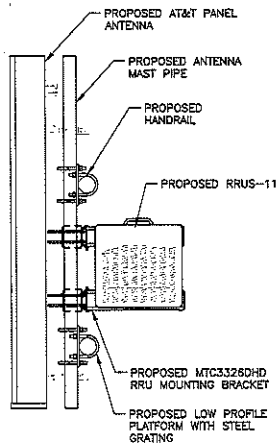

8 RRUS MOUNTING DETAIL
SCALE: N.T.S.

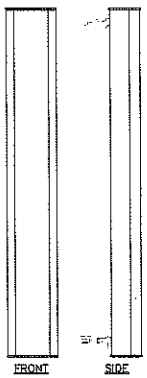

MANUFACTURER: COMMSCOPE
MODEL: JAH4-65C-R4
WEIGHT W/O MOUNTING HARDWARE: 87.3 LBS
DIMENSIONS: HXWXD: 96"X13.8"X8.2"
FREQUENCY: REFER TO RF DATA SHEET

9 JAH4-65C-R4 DETAIL
SCALE: N.T.S.

PREPARED FOR:

at&t

AT&T MOBILITY
1801 VALLEY VIEW LANE
FARMERS BRANCH, TX 75234

TILLMAN INFRASTRUCTURE

SITE NAME:
ATC GS ICE HOUSE RELO
SITE NUMBER:
HX0713 (HX0549)
SITE ADDRESS:
6911 HWY 225
DEER PARK, TX 77536
HARRIS COUNTY

STATE OF TEXAS
DAVID J. HILDEBRANDT
106713
LICENSED
PROFESSIONAL ENGINEER
4/6/18

LEVEL 5 CONSULTING ENGINEERS, INC.
19315 FM 2252, STE. 301
GARDEN RIDGE, TX 78266
PH: (210) 542-5911
F-13646

DRAWN BY:	IL
APPROVED BY:	TH
DATE DRAWN:	04/23/18

REVISION

NO	DESCRIPTION	BY	DATE
0	ISSUED FOR CONSTRUCTION	IL	04/23/18
1	NEW RFDS	IL	03/14/18
2	NEW RFDS	WS	11/07/18

SHEET TITLE:
EQUIPMENT DETAILS

SHEET NUMBER:
A3.0

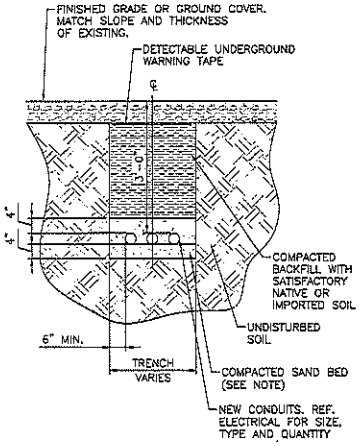

1 TYPICAL UTILITY TRENCH DETAIL
SCALE: N.T.S.

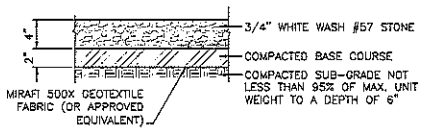

2 COMPOUND CROSS SECTION DETAIL
SCALE: N.T.S.

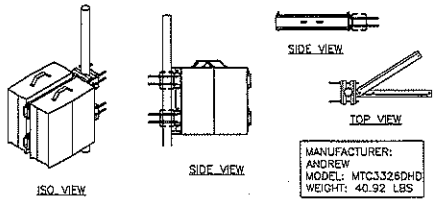

3 MTC3326DHD DETAIL
SCALE: N.T.S.

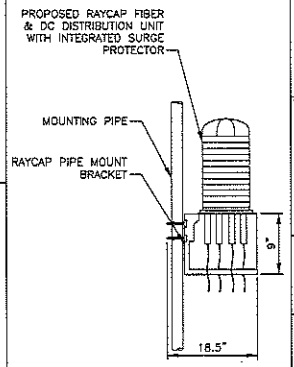

4 RAYCAP "SQUID" DETAIL
SCALE: N.T.S.

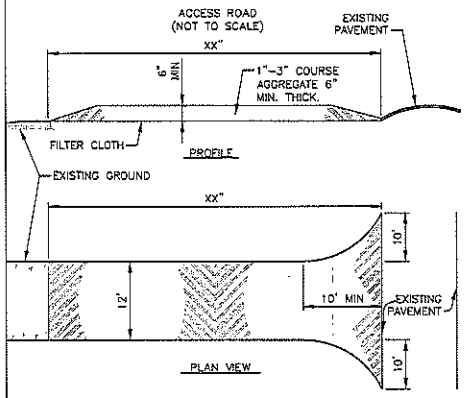

5 GRAVEL ACCESS DRIVEWAY DETAIL
SCALE: N.T.S.

KEYED NOTES:

1. NEW 200A 1Ø3W 240/120V METER SOCKET IN METER BASE BY ELECTRIC SERVICE PROVIDER.
2. NEW SERVICE ENTRANCE RATED DISCONNECT, 200A, 120/240A, 1 PHASE, 3 WIRE. INSTALL (4) 200-AMP BREAKERS. ONE PER METER.
3. NEW MAIN TELCO ENCLOSURE. INSTALL 24" GROUND BAR.
4. PROVIDE 3-3/0, 1#2G TYPE THWN IN 2" CONDUIT (IMC ABOVE GRADE, SCH.80 PVC BELOW GRADE TO AT&T LEASE AREA.
5. 4" CONDUIT WITH (3) 1" INNERDUCT BETWEEN EQUIPMENT TELCO ENCLOSURE AND TELCO SERVICE MEET ME POINT.
6. (1) 3" SCHEDULE 40 AND (2) 2" SCHEDULE 40 CONDUITS BETWEEN TELCO ENCLOSURE AND AT&T LEASE AREA. ENSURE ALL THREE CONDUITS HAVE PULL STRINGS.

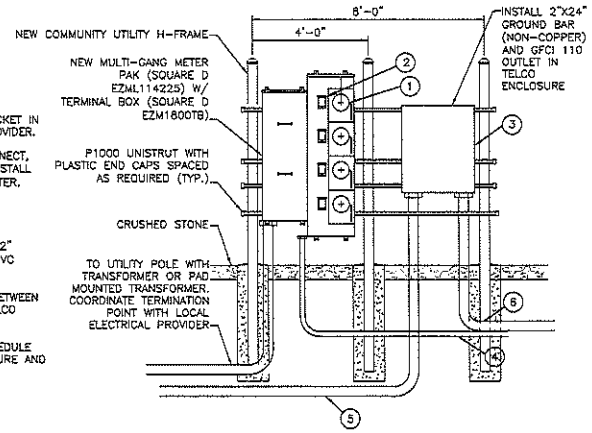

NOTES:

CONFIGURATION OF SERVICE LATERAL SHOW FOR REFERENCE. COORDINATE EXACT REQUIREMENTS WITH UTILITY PROVIDER.

1. VERIFY ALL EXISTING UNDERGROUND. UTILITIES BEFORE TRENCHING.
2. ELECTRICAL CONTRACTOR SHALL CONTACT POWER CO. & TELE. CO. AND VERIFY EXACT ROUTING, SIZES AND CONDITIONS BEFORE TRENCHING.
3. INSTALL ALL CONDUITS & EQUIPMENT AS SPECIFIED BY POWER CO. & TELE. CO.
4. PROVIDE NYLON PULL STRINGS ON ALL EMPTY CONDUITS.

6 MULTI-TENANT UTILITY H-FRAME DETAIL
SCALE: N.T.S.

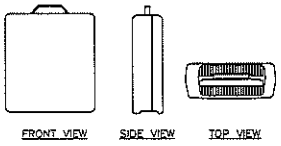

MANUFACTURER: ERICSSON
MODEL: RRUS-12
DIMENSIONS W/ SOLAR SHIELD:
18.50" X 7.36" X 20.39"
WEIGHT W/ SOLAR SHIELD: 57.98 LBS

7 RRUS-12 DETAIL
SCALE: N.T.S.

PREPARED FOR:

at&t

AT&T MOBILITY
1801 VALLEY VIEW LANE
FARMERS BRANCH, TX 75234

TILLMAN INFRASTRUCTURE

SITE NAME:
ATC GS ICE HOUSE RELO
SITE NUMBER:
HX0713 (HX0549)

SITE ADDRESS:
6911 HWY 225
DEER PARK, TX 77536
HARRIS COUNTY

STATE OF TEXAS
DAVID J. HILDEBRANDT
106713
LICENSED
PROFESSIONAL ENGINEER
11/6/18

LEVEL 5 CONSULTING ENGINEERS, INC.
19315 FM 2252, STE. 301
GARDEN RIDGE, TX 78266
PH: (210) 542-5911
F-13646

DRAWN BY:	IL
APPROVED BY:	TH
DATE DRAWN:	04/23/18

REVISION

NO	DESCRIPTION	BY	DATE
0	ISSUED FOR CONSTRUCTION	IL	04/23/18
1	NEW RFDS	IL	03/14/18
2	NEW RFDS	WS	11/07/18

SHEET TITLE:
SITE DETAILS

SHEET NUMBER:
A3.1

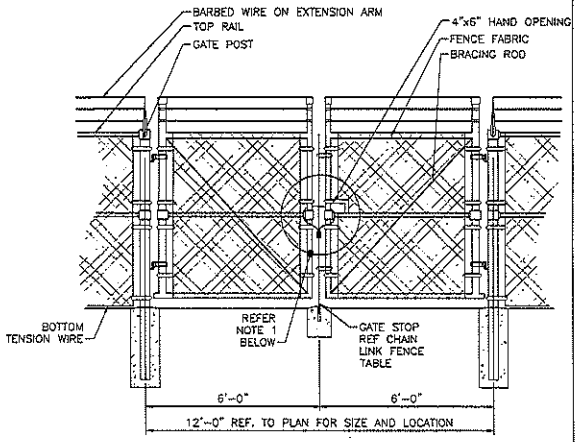

NOTE 1:

CONTRACTOR TO SUPPLY AND INSTALL A STYMIELOCK FOR LOCKING THE GATE

1 TYPICAL GATE DETAIL

SCALE: N.T.S.

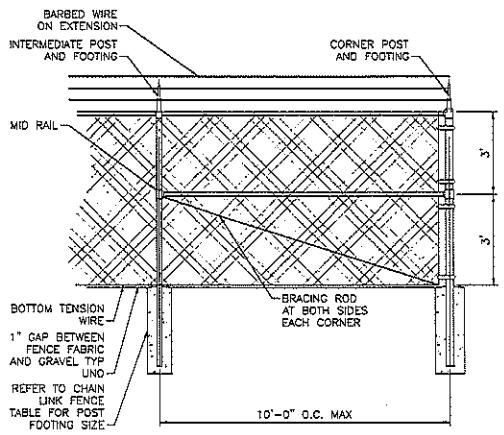

2 TYPICAL FENCE CORNER DETAIL

SCALE: N.T.S.

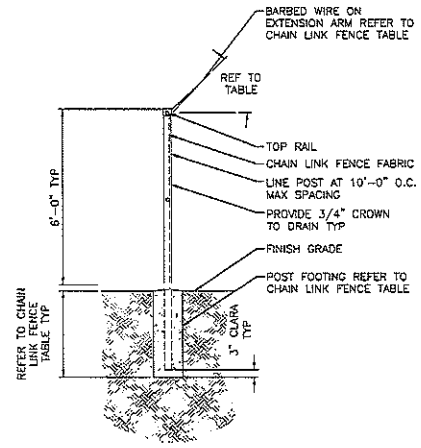

3 TYPICAL FENCE POST DETAIL

SCALE: N.T.S.

CHAIN LINK FENCE TABLE

COMPONENT	DIMENSIONS	HARDWARE AND FEATURES
FENCE FABRIC	6' HIGH, 9 GA., 2"x2" ZINC COATED MESH	SELVEDGE TOP AND BOTTOM
BARBED WIRE	BARBED WIRE WITH FOUR (4) POINT BARBS	THREE (3) RUNS
EXTENSION ARM	STAMPED STEEL WITH MALLEABLE IRON BASE	45 DEGREE, ANGLE OUTWARD
END AND CORNER POSTS	3" STD. GA. (SCH 40) PIPE	36"x12" CONCRETE FOOTING
LINE POSTS	2" STD. GA. (SCH 40) PIPE	36"x10" CONCRETE FOOTING, REF NOTE 3
DRIVEWAY GATE POSTS	4" STD. GA. (SCH 40) PIPE	48"x12" CONCRETE FOOTING
WALKWAY GATE POSTS	3" STD. GA. (SCH 40) PIPE	36"x12" CONCRETE FOOTING
TOP RAILS	1 1/2" STD. GA. (SCH 40) PIPE	ATTACHED WITH PROPER FITTING
MID RAILS	1 1/2" STD. GA. (SCH 40) PIPE	ATTACHED WITH PROPER FITTING
BRACE RODS	3/8" CARBON STEEL	ATTACHED WITH PROPER FITTING
BOTTOM TENSION WIRE	7 GA. 1900 LB. TENSILE STRENGTH	ALL SIDES
TENSION BARS	3/16" x 3/4" FULL HEIGHT OF FABRIC	SPACE TENSION BANDS AT 15" +/- O.C.
TENSION WIRE	9 GA. ALUMINUM	12" O.C. FOR LINE POSTS AND GATES 24" O.C. FOR RAILS AND TENSION WIRES
GATE FRAME	2" STD. GA. (SCH 40) PIPE	WELDED ASSEMBLY (COLD GA. AND SILVER PAINT WELDED AREAS)
POST CAPS	PER POST DIAMETER	ALL POSTS
POST, RAIL AND GATE FITTINGS	AS REQUIRED	STAMPED STEEL OR MALLEABLE CASTING
GATE HINGES	AS REQUIRED	OFFSET TYPE WITH 180 DEGREE SWING
DOUBLE GATE LATCH	AS REQUIRED	DUCKBILL LATCH ON ACTIVE LEAF, DROP BOLTS ON BOTH LEAVES
GATE STOPS (CLOSED POSITION)	AS REQUIRED	MUSHROOM STOP SET IN CONCRETE
GATE STOPS (OPEN POSITION)	AS REQUIRED	AS REQUIRED
LOCK CHAIN	3/8" SIZE, 36" LONG	HOT DIPPED GALVANIZED OR VINYL COATED

4 FENCE SPECIFICATION TABLE

SCALE: N.T.S.

GENERAL NOTES

1. SET POSTS AT 4-FEET MAXIMUM SPACING. IF FACTORY PREASSEMBLED FENCE WITH SUPPORT NETTING IS USED, SPACING OF POST MAY BE INCREASED TO 8 FEET MAXIMUM.
2. WHEN TWO SECTIONS OF FILTER FABRIC ADJOIN EACH OTHER, OVERLAP 6 INCHES AT THE POST, FOLD TOGETHER, AND ATTACH TO THE POSTS.
3. REMOVE SEDIMENT DEPOSITS WHEN SILT DEPTH REACHES ONE-THIRD OF THE HEIGHT OF THE FENCE.

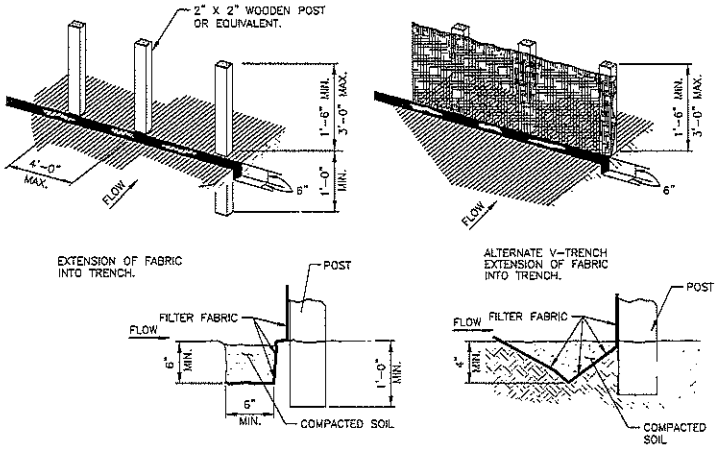

5 SILT FENCE DETAIL

SCALE: N.T.S.

PREPARED FOR:

at&t

AT&T MOBILITY
1801 VALLEY VIEW LANE
FARMERS BRANCH, TX 75234

TILLMAN INFRASTRUCTURE

SITE NAME:
ATC GS ICE HOUSE RELO

SITE NUMBER:
HX0713 (HX0549)

SITE ADDRESS:
6911 HWY 225
DEER PARK, TX 77536
HARRIS COUNTY

STATE OF TEXAS
DAVID J. HILDEBRANDT
106713
LICENSED
PROFESSIONAL ENGINEER
11/6/18

LEVEL 5 CONSULTING ENGINEERS, INC.
19315 FM 2252, STE. 301
GARDEN RIDGE, TX 78266
PH: (210) 542-5911
F-13646

DRAWN BY:	IL
APPROVED BY:	TH
DATE DRAWN:	04/23/18

REVISION

NO	DESCRIPTION	BY	DATE
0	ISSUED FOR CONSTRUCTION	IL	04/23/18
1	NEW RFDS	IL	03/14/18
2	NEW RFDS	WS	11/07/18

SHEET TITLE:

FENCE DETAILS

SHEET NUMBER:

A3.2

THE INFORMATION CONTAINED IN THIS DRAWING IS THE SOLE PROPERTY OF ELECTRO MECHANICAL INDUSTRIES, INC. ANY REPRODUCTION IN PART OR WHOLE, WITHOUT THE WRITTEN PERMISSION OF ELECTRO MECHANICAL IND., IS PROHIBITED

REVISIONS

REV.	DCN #	DESCRIPTION	DATE	BY	APPROVED
3	DCN00459	ADDED 5/8" WIC MOUNTING HARDWARE	5.21.18	PCG	

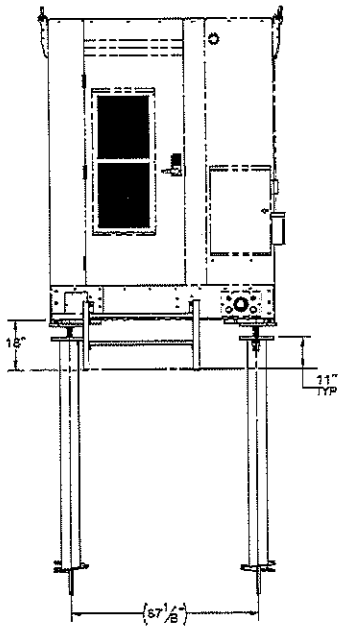

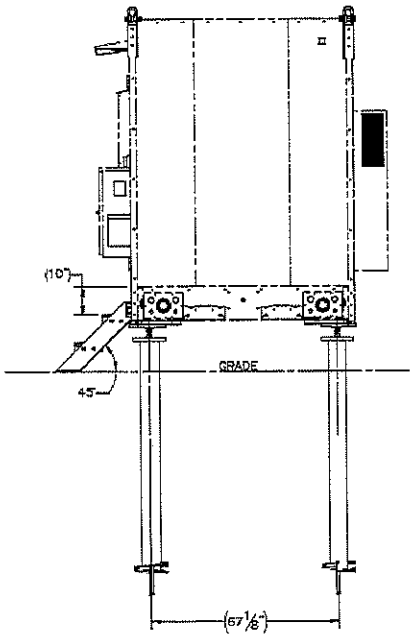

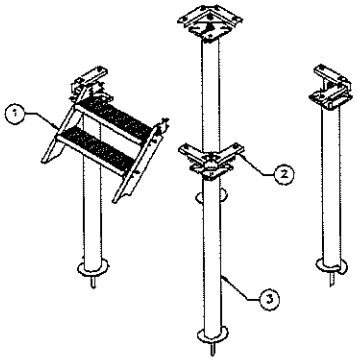

ITEM NO.	QTY.	PART NUMBER	DESCRIPTION	WEIGHT
1	1	1003-0000-0015	WIC 2-STEP STAIRS KIT, 45 DEGREE	103.1
2	4	W-000-771	ATT WIC HELICAL ADAPTER WELDMENT	45.0
3	4	1008-0050-0015	6" X 7', HELICAL, SINGLE STUD OPTION	177.4
4	4	002-0AT-H009	ROD, THREADED, 1.00"-8 X 9.00" LG, ASTM A193 B7, GALV	1.60
5	8	002-0NC-0000	NUT, HX, ANCO LOCK, 1.00-8UNC, GR 2H, GALV	0.43
6	8	002-0NC-0008	NUT, HX, 1.00"-8UNC, GR 2H, GALV	0.42
7	8	002-0LW-G008	WASHER, SPLIT LOCK, 1.00", GALV	0.09
8	8	002-0FW-G024	WASHER, FLAT, 1.063 ID, 3.25 OD, GALV	0.07
9	8	002-0FW-G009	WASHER, FLAT, 1.00", F436, GALV	0.08
10	32	002-0FW-G004	WASHER, FLAT, .625", ASTM F436, GALV	0.03
11	16	002-08C-0033	BOLT, HX HD, .625-11UNC X 1.75" LG, ASTM A325, GALV	0.03
12	16	002-0LW-G004	WASHER, SPLIT LOCK, .625 INCH, GALV	0.03
13	16	002-0NC-0011	NUT, HX, .625-11UNC, GR DH, GALV	0.12

SURFACE FINISH √ UNLESS OTHERWISE SPECIFIED

MATERIAL: SEE PARTS LIST

THIRD ANGLE PROJECTION

NEXT ASSY | USED ON

APPLICATION

UNLESS OTHERWISE SPECIFIED DIMENSIONS ARE IN INCHES

TOLERANCES: .X ±.06, .XX ±.01, .XXX ±.005, FRACTIONS ±1/64, ANGLES ±.25°, SCALE: DECIMALS OR FRACTIONS ±1/64, ANGLES ±1/64

APPROVALS	DATE
DRAWN: BUNJI	01.24.2018
CHECKED: G.SANCHEZ	4.2.18
ENGINEERING DESIGNER: J. SUTHRAM	4.2.18
PRODUCTION: J.FLUDERNAND	4.2.18

ELECTRO MECHANICAL INDUSTRIES, INC.
4700 SOUTH PIPER DRIVE
MESQUITE, TEXAS 75149
(972) 329-0202

TITLE: HELICAL MOUNTED WIC ASSEMBLY

SIZE: B | DRAWING NO.: 1000-0000-0101 | REV: 3

SCALE: 1:25 | WEIGHT: 1011.3 | SHEET 1 OF 2

PREPARED FOR:

at&t

AT&T MOBILITY
1801 VALLEY VIEW LANE
FARMERS BRANCH, TX 75234

TILLMAN INFRASTRUCTURE

SITE NAME:
ATC GS ICE HOUSE RELO

SITE NUMBER:
HX0713 (HX0549)

SITE ADDRESS:
6911 HWY 225
DEER PARK, TX 77536
HARRIS COUNTY

STATE OF TEXAS
DAVID J. HILDEBRANDT
106713
LICENSED
PROFESSIONAL ENGINEER
11/6/18

LEVEL 5 CONSULTING ENGINEERS, INC.
19315 FM 2252, STE. 301
GARDEN RIDGE, TX 78266
PH: (210) 542-5911
F-13646

DRAWN BY:	IL
APPROVED BY:	TH
DATE DRAWN:	04/23/18

REVISION

NO	DESCRIPTION	BY	DATE
0	ISSUED FOR CONSTRUCTION	IL	04/23/18
1	NEW RFDS	IL	03/14/18
2	NEW RFDS	WS	11/07/18

SHEET TITLE:
EQUIPMENT DETAILS

SHEET NUMBER:
A3.3

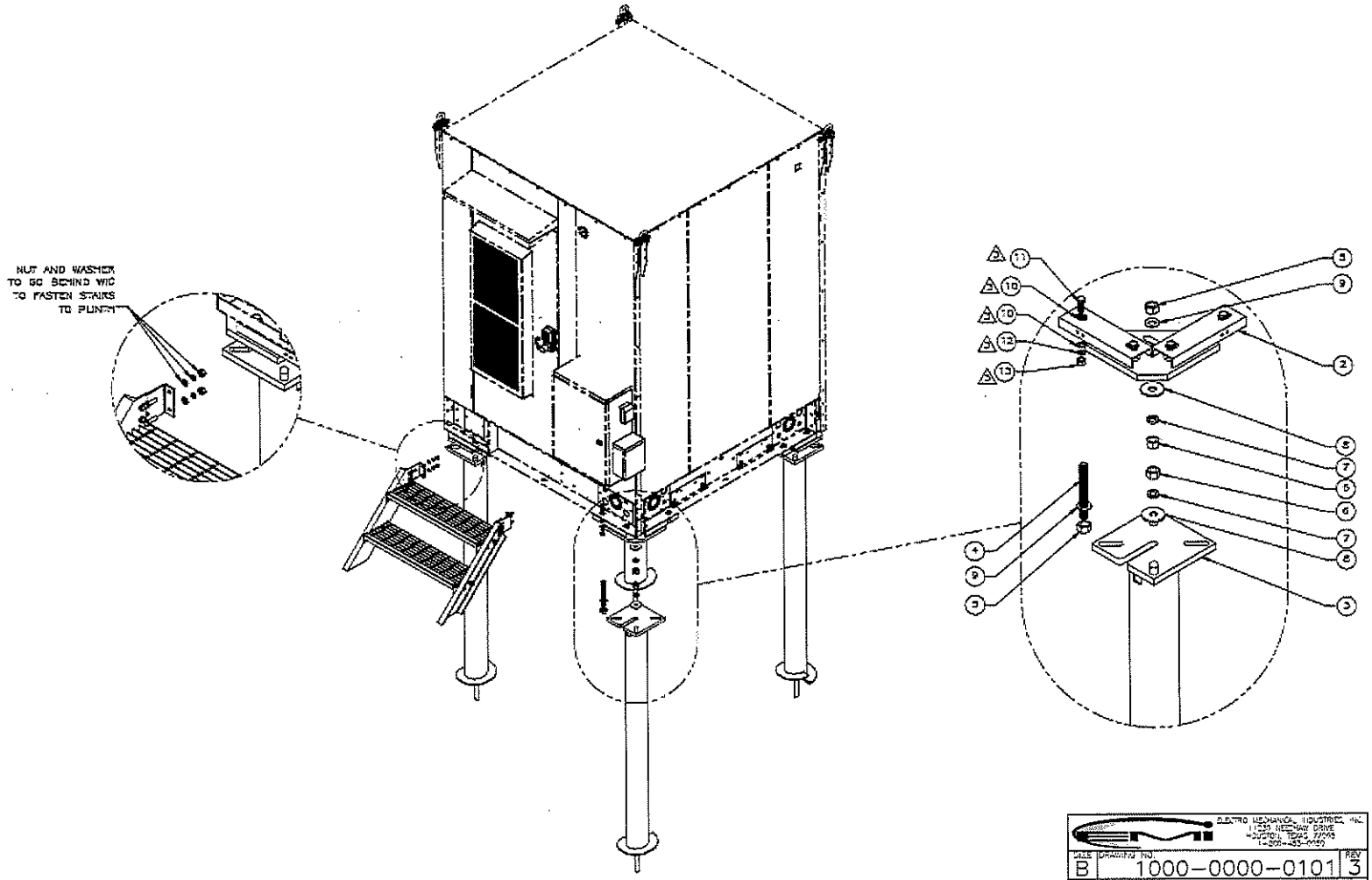

ELECTRO MECHANICAL INDUSTRIES, INC.
11231 NEECHAW DRIVE
HOUSTON, TEXAS 77065
(281)-463-0160

SIZE	DRAWING NO.	REV
B	1000-0000-0101	3

SCALE: 1:24 | SHEET 2 OF 3

PREPARED FOR:

at&t

AT&T MOBILITY
1801 VALLEY VIEW LANE
FARMERS BRANCH, TX 75234

TILLMAN INFRASTRUCTURE

SITE NAME:
ATC GS ICE HOUSE RELO

SITE NUMBER:
HX0713 (HX0549)

SITE ADDRESS:
6911 HWY 225
DEER PARK, TX 77536
HARRIS COUNTY

STATE OF TEXAS
DAVID J. HILDEBRANDT
106713
LICENSED
PROFESSIONAL ENGINEER
11/6/18

LEVEL 5 CONSULTING ENGINEERS, INC.
19315 FM 2252, STE. 301
GARDEN RIDGE, TX 78266
PH: (210) 542-5911
F-13646

DRAWN BY:	IL
APPROVED BY:	TH
DATE DRAWN:	04/23/18

REVISION

NO	DESCRIPTION	BY	DATE
0	ISSUED FOR CONSTRUCTION	IL	04/23/18
1	NEW RFDS	IL	03/14/18
2	NEW RFDS	WS	11/07/18

SHEET TITLE:
EQUIPMENT DETAILS

SHEET NUMBER:
A3.4

THE INFORMATION CONTAINED IN THIS DRAWING IS THE SOLE PROPERTY OF ELECTRO MECHANICAL INDUSTRIES, INC. ANY REPRODUCTION IN PART OR WHOLE WITHOUT THE WRITTEN PERMISSION OF ELECTRO MECHANICAL IND., IS PROHIBITED.

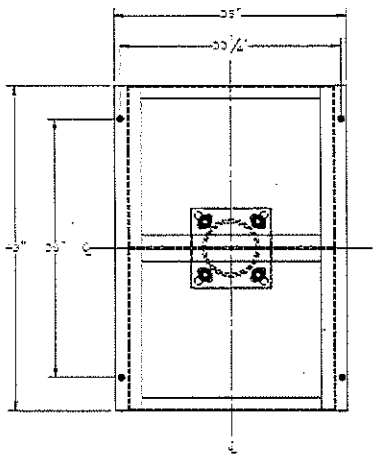

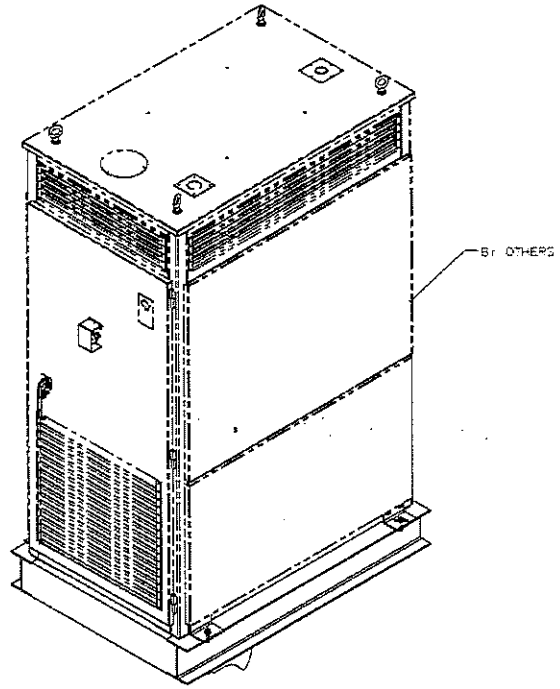

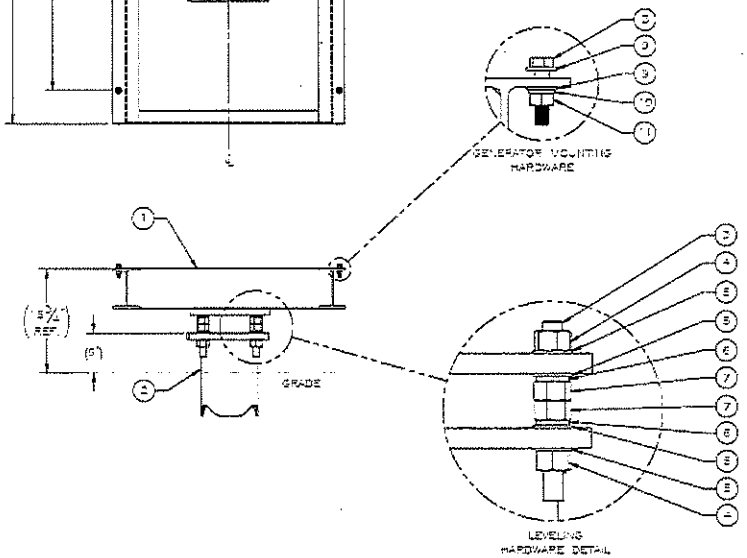

ITEM NO.	QTY	PART NUMBER	DESCRIPTION	LENGTH	WEIGHT
1	1	W-000-474	GENERATOR FRAME WELDMENT		204.1
2	1	400-000-1013	HELICAL PIER, 8" X 7', 1" BASE		194.0
3	4	002-0AT-H000	ROD, THREADED, 1.00"-8 X 9.00" LG, ASTM A193 B7, GALV		2.01
4	8	002-0NG-0000	NUT, HX, ANCO LOCK, 1.00-8UNC, GR 2H, GALV		0.43
5	16	002-0FW-G009	WASHER, FLAT, 1.00", F436, GALV		0.08
6	8	002-0LW-G008	WASHER, SPLIT LOCK, 1.00", GALV		0.09
7	8	002-0NG-0008	NUT, HX, 1.00"-8UNC, GR 2H, GALV		0.42
8	4	COMMON	Bolt, Tek Head .4375-14 UNC X 1.75 LG,GR 5 ZINC-PLTD		0.01
9	8	COMMON	WASHER, FLAT, .4375 INCH ZINC PLTD		0.00
10	4	COMMON	WASHER, SPLIT LOCK, .4375 INCH, ZINC PLTD		0.01
11	4	COMMON	NUT, HEX, .4375-14 UNC, GR 8, ZINC		0.004

SURFACE FINISH: UNLESS OTHERWISE SPECIFIED
MATERIAL: SEE PARTS LIST
THIRD ANGLE PROJECTION
NEXT ASSY | USED ON
APPLICATION
INTERPRET DIMENSIONS AND TOLERANCES PER ASME Y14.5M-1994
TOLERANCES: .0 ±.06; .00 ±.01; .000 ±.005; FRACTIONS ±1/16; ANGLES ±.25°
HOLES: DRILLED OR PUNCHED +/-1/32; REAMED +/-1/64
APPROVALS | DATE
DRAWN: J. CRYELL 4.2.17
CHECKED
ENGINEER/DESIGNER
PRODUCTION
ELECTRO MECHANICAL INDUSTRIES, INC. 1230 HOUSTON DRIVE KERRVILLE, TEXAS 78028 1-800-433-5931
TITLE: GENERATOR PLATFORM
SIZE: B | DRAWING NO.: 1000-0010-0076 | REV: —
SCALE: 1:16 | WEIGHT: 203.2 lbs. | SHEET 1 OF 1

PREPARED FOR:

at&t

AT&T MOBILITY
1801 VALLEY VIEW LANE
FARMERS BRANCH, TX 75234

TILLMAN INFRASTRUCTURE

SITE NAME:
ATC GS ICE HOUSE RELO
SITE NUMBER:
HX0713 (HX0549)
SITE ADDRESS:
6911 HWY 225
DEER PARK, TX 77536
HARRIS COUNTY

STATE OF TEXAS
DAVID J. HILDEBRANDT
106713
LICENSED
PROFESSIONAL ENGINEER
11/6/18

LEVEL 5 CONSULTING ENGINEERS, INC.
19315 FM 2252, STE. 301
GARDEN RIDGE, TX 78266
PH: (210) 542-5911
F-13646

DRAWN BY:	IL
APPROVED BY:	TH
DATE DRAWN:	04/23/18

REVISION

NO	DESCRIPTION	BY	DATE
0	ISSUED FOR CONSTRUCTION	IL	04/23/18
1	NEW RFDS	IL	03/14/18
2	NEW RFDS	WS	11/07/18

SHEET TITLE:
EQUIPMENT DETAILS

SHEET NUMBER:
A3.5

THE INFORMATION CONTAINED IN THIS DRAWING IS THE SOLE PROPERTY OF ELECTRO MECHANICAL INDUSTRIES, INC. ANY REPRODUCTION IN PART OR WHOLE WITHOUT THE WRITTEN PERMISSION OF ELECTRO MECHANICAL IND., IS PROHIBITED.

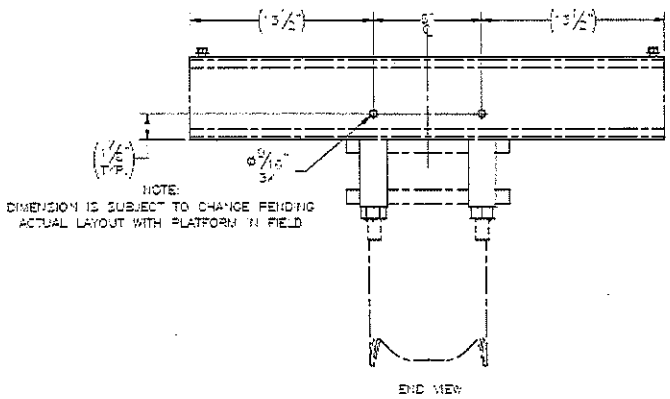

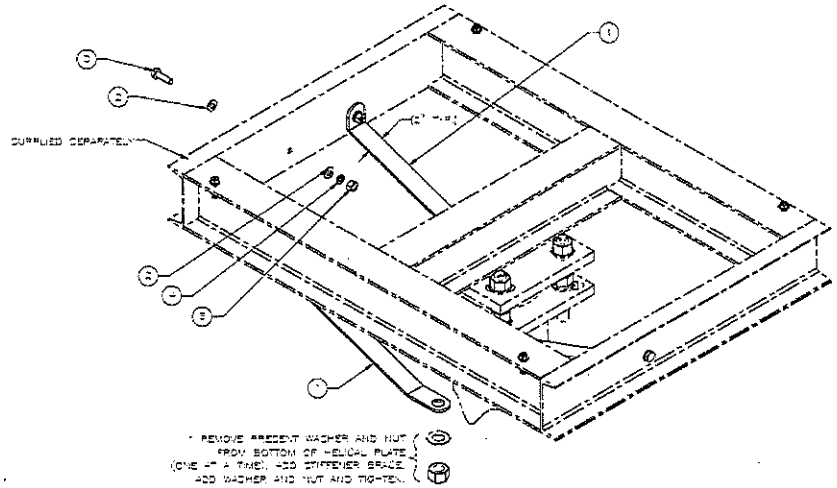

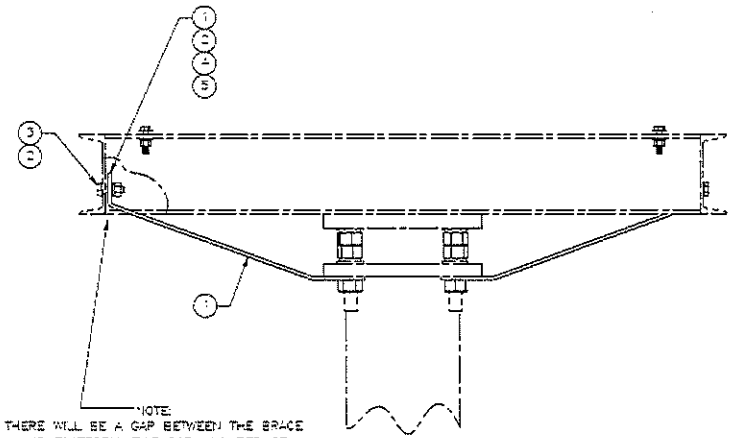

ITEM NO.	QTY. REQD	PART NUMBER	DESCRIPTION	LENGTH	WEIGHT
1	3	P-001-783	STIFFENER, GENERATOR PLATFORM	22 9/16"	3.1
2	6	002-0FW-G002	WASHER, FLAT, .500", F436, GALV		0.02
3	3	002-0BG-0012	BOLT, HX HD, .500-13UNC X 1.75 LG, ASTM A325, GALV		0.16
4	3	002-0LW-G002	WASHER, SPLIT LOCK, .500", GALV		0.01
5	3	002-0NG-0001	NUT, HEX, .500-13UNC, GR DH, GALV		0.06

SURFACE FINISH: ✓ UNLESS OTHERWISE SPECIFIED
MATERIAL: SEE PARTS LIST
THIRD ANGLE PROJECTION
NEXT ASSY | USED ON
APPLICATION

UNLESS OTHERWISE SPECIFIED DIMENSIONS ARE IN INCHES
TOLERANCES: .0 ±.04; .00 ±.01; .000 ±.005; FRACTIONS ±1/16; ANGLES ±.25°
HOLES: DRILLED OR PUNCHED -1/32; BURNED ±1/32

APPROVALS	DATE
DRAWN RLW/r	10/19/2017
CHECKED	
ENGINEER/DESIGNER	
PRODUCTION	

ELECTRO MECHANICAL INDUSTRIES, INC. 11111 KATY FREEWAY, SUITE 725 HOUSTON, TEXAS 77079 (281)-493-0050

TITLE: STIFFENER BRACE KIT

SIZE B | DRAWING NO. 1000-0020-0003 | REV —
SCALE: 1:5 | WEIGHT: 27.1 lbs. | SHEET 1 OF 1

PREPARED FOR:

at&t

AT&T MOBILITY
1801 VALLEY VIEW LANE
FARMERS BRANCH, TX 75234

TILLMAN INFRASTRUCTURE

SITE NAME:
ATC GS ICE HOUSE RELO
SITE NUMBER:
HX0713 (HX0549)
SITE ADDRESS:
6911 HWY 225
DEER PARK, TX 77536
HARRIS COUNTY

STATE OF TEXAS
DAVID J. HILDEBRANDT
106713
LICENSED
PROFESSIONAL ENGINEER
11/6/18

LEVEL 5 CONSULTING ENGINEERS, INC.
19315 FM 2252, STE. 301
GARDEN RIDGE, TX 78266
PH: (210) 542-5911
F-13646

DRAWN BY:	IL
APPROVED BY:	TH
DATE DRAWN:	04/23/18

REVISION

NO	DESCRIPTION	BY	DATE
0	ISSUED FOR CONSTRUCTION	IL	04/23/18
1	NEW RFDS	IL	03/14/18
2	NEW RFDS	WS	11/07/18

SHEET TITLE:
EQUIPMENT DETAILS

SHEET NUMBER:
A3.6

GENERAL NOTES:

1. ELECTRICAL CONTRACTOR MUST COORDINATE NEW POWER AND TELCO SERVICE WITH CM AND UTILITY PROVIDER. ROUTING, SIZES AND INSTALLATION REQUIREMENTS AS REQUIRED BY UTILITY PROVIDER STANDARDS.
2. ELECTRICAL SERVICE TO FEED PRE-FABRICATED EQUIPMENT SHELTER SHOWN. REFER TO STATE OF TEXAS APPROVED SHELTER PLANS FOR LAYOUT OF LIGHTING AND POWER BY THE MANUFACTURER.
3. IT IS THE INTENTION OF THESE SPECIFICATIONS AND THE RELATED PLANS TO SHOW COMPLETE, PROPERLY FUNCTIONING SYSTEMS. ALL SYSTEMS, WIRING AND RACEWAYS SHALL BE INSTALLED PER NFPA-70 (APPLICABLE) AND AUTHORITY HAVING JURISDICTION.
4. ALL MATERIAL FOR WHICH THERE IS A CATEGORY FOR TESTING BY UL OR CSA SHALL BE SO TESTED, LISTED AND LABELED.
5. VERIFY LOCATION OF EXISTING UTILITIES PRIOR TO CONSTRUCTION. HAND EXCAVATE AROUND EXISTING UTILITIES.
6. CONDUIT ROUTING SHOWN IS SCHEMATIC IN NATURE. CONTRACTOR TO ROUTE CONDUIT TO AVOID TRIPPING HAZARDS.

ELECTRICAL KEYED NOTES:

1. PROPOSED METER. COORDINATE WITH LOCAL POWER COMPANY PRIOR TO COMMENCEMENT OF WORK FOR PROVISION OF NEW SERVICE.
2. 2" SCH. 80 CONDUIT FROM METER TO WIC (APPROX. LENGTH IS ±40'-0" USING ROUTE AS SHOWN).
3. (1) 3" SCH. 40 AND (2) 2" SCH. 40 CONDUITS (APPROX. LENGTH IS ±42-0"). ENSURE ALL THREE CONDUITS HAVE PULL STRINGS.
4. (2) 3/4" AND (1) 2" CONDUIT FOR GENERATOR CIRCUITS. SEE ONE-LINE DIAGRAM FOR WIRE SIZES.
5. 1" CONDUIT WITH CIRCUITS FOR OFF-SITE ALARM NOTIFICATIONS

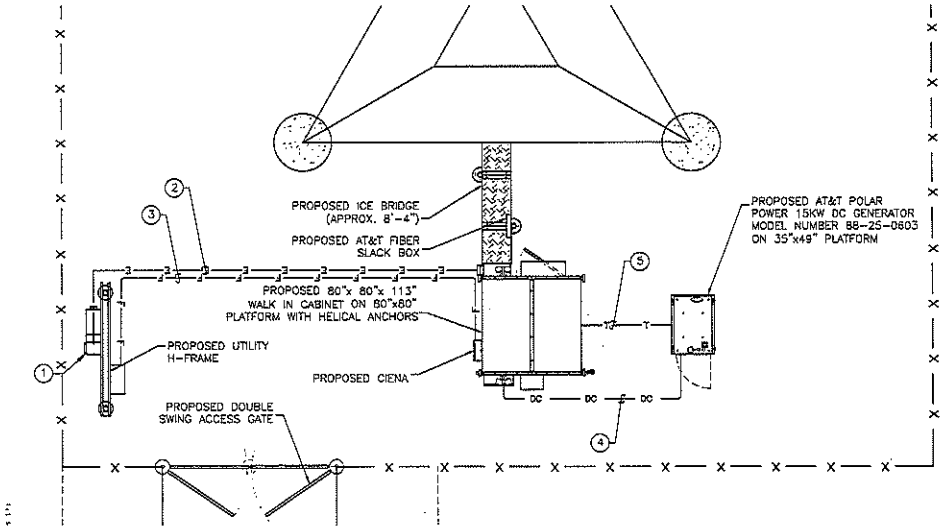

TRUE NORTH

1 ELECTRICAL / TELCO SITE PLAN

FULL SIZE PLOT SCALE: 1/4" = 1'-0"
HALF SIZE PLOT SCALE: 1/8" = 1'-0"

0 2' 4' 8'

AC POWER PANEL - AT&T											
Location:	WIC Exterior Wall			Enclosure:	NEMA 3R			A.I.C. Rating:	22 kA		
Mounting:	Surface			Volts:	240			MCB Rating:	200A		
DESCRIPTION	VA	C/NC	BKR	POS. #	L1	L2	POS. #	BKR	C/NC	VA	DESCRIPTION
RECTIFIER SHELF 1A	1600	C	30	1	1280		2	20	NC	180	EXT. GFCI
	1600	C		3		3200	4	30	C	1600	RECTIFIER SHELF 1B
RECTIFIER SHELF 1C	1600	C	30	5	3200		6		C	1600	
	1600	C		7		3200	8	30	C	1600	RECTIFIER SHELF 2B
RECTIFIER SHELF 2A	1600	C	30	9	3200		10		C	1600	
	1600	C		11		3200	12	30	C	1600	RECTIFIER SHELF 3A
BLANK				13	1600		14		C	1600	
				15		0	16				BLANK
BLANK				17	0		18				
				19		0	20				BLANK
BLANK				21	0		22				
				23		0	24				BLANK
1-TON AC UNIT	1800	C	20	25	1800		26				
	1800	C		27		2300	28	20	NC	500	EXT. FLOOD LIGHTS
APPLIANCE OUTLETS	360	NC	20	29	360		30				BLANK
PHASE TOTALS (VA):					11940	11900					
CURRENT PER PHASE (A):					123	122		AMPS/PHASE CANNOT EXCEED MCB RATING			
PANEL TOTAL (VA):					23840			LEGEND: C=CONTINUOUS, NC = NON CONTINUOUS			

PANEL CAPACITY (KVA): 48
PANEL LOADING (100% NC LOAD) (KVA): 1.0
PANEL LOADING (125% C LOAD) (KVA): 26.5
PANEL LOADING TOTAL (KVA): 29.5
SPARE CAPACITY (KVA): 18.5

CONNECTED LOAD (KVA): 23.8

2 PANEL SCHEDULE

SCALE: N.T.S.

Load Analysis FOR AT&T CELL SITE		
Description	NEC Reference	Demand Load (kVA)
Lighting Load	220.42	0.5
Receptacles	220.44	0.96
General Load - Wireless Equipment + 25%	220.14	27.93
Total		29.39
Transformer size: 167KVA		
Service Description: 240V, 200A 1PH, 3W from Centerpoint		

3 LOAD ANALYSIS

SCALE: N.T.S.

NOTE:

1. A PERMANENTLY AFFIXED LABEL SHALL BE APPLIED WITH THE FAULT CURRENT AT THE TIME OF INSTALLATION AND CALCULATION. THE LABEL SHALL BE 2"X3" IN SIZE AND SHALL BE BLUE LETTERING ON A CONTRASTING BACKGROUND. THIS LABEL SHALL ALSO INCLUDE THE DATE OF THE CALCULATION.

Short Circuit Calculation - 1PH 240V (Equivalent kVA Method)	
Infinite Bus from Utility Transformer	
Max Transformer Size	167 kVA
Trans. Impedance (%Z)	1.40%
Service Lateral Conductors	(2) Sets of #500kcmil
Service Lateral Length (min.)	50 ft.
AT&T Feeder Conductors	#3/0
AT&T Feeder Length (min.)	30 ft.
AFC at AT&T Equipment Panel	21,291A
AT&T Panelboard min. AIC Rating	22,000A

4 SHORT CIRCUIT CALCULATIONS

SCALE: N.T.S.

PREPARED FOR:

at&t

AT&T MOBILITY
1801 VALLEY VIEW LANE
FARMERS BRANCH, TX 75234

TILLMAN INFRASTRUCTURE

SITE NAME:
ATC GS ICE HOUSE RELO
SITE NUMBER:
HX0713 (HX0549)
SITE ADDRESS:
6911 HWY 225
DEER PARK, TX 77536
HARRIS COUNTY

STATE OF TEXAS
DAVID J. HILDEBRANDT
106713
LICENSED
PROFESSIONAL ENGINEER
11/6/18

LEVEL 5 CONSULTING ENGINEERS, INC.
19315 FM 2252, STE. 301
GARDEN RIDGE, TX 78266
PH: (210) 542-5911
F-13646

DRAWN BY:	IL
APPROVED BY:	TH
DATE DRAWN:	04/23/18

REVISION

NO	DESCRIPTION	BY	DATE
0	ISSUED FOR CONSTRUCTION	IL	04/23/18
1	NEW RFDS	IL	03/14/18
2	NEW RFDS	WS	11/07/18

SHEET TITLE:
ELECTRICAL AND TELCO PLAN

SHEET NUMBER:
E1.0

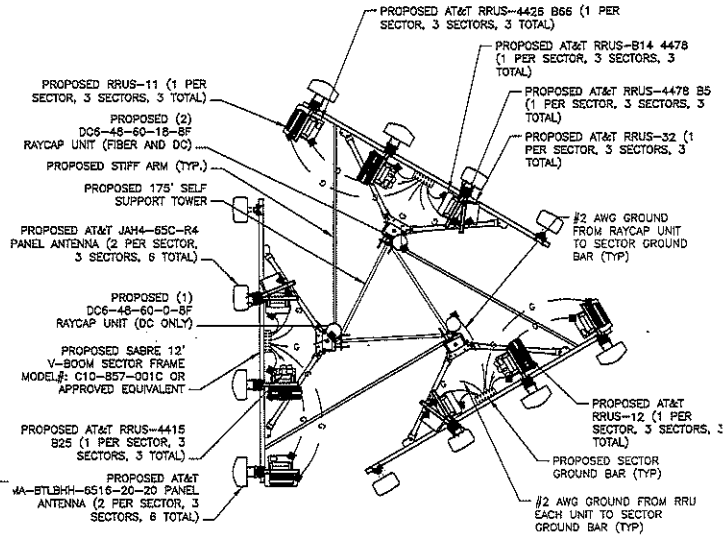

TRUE NORTH

1 ANTENNA GROUNDING PLAN

FULL SIZE PLOT SCALE: 3/8" = 1'-0"
HALF SIZE PLOT SCALE: 3/16" = 1'-0"

0 2' 4' 8'

GROUNDING NOTES:

1. ANTENNA GROUND BARS SHALL BE INSTALLED WITHOUT INSULATOR (CHERRY) USING UL LISTED MOUNTING DEVICES.
2. POLISH GALVANIZED SURFACES WITH A STEEL BRUSH FOR ALL CONNECTING SURFACES.

ABBREVIATIONS:

AGB	ANTENNA GROUND BAR
G	GROUND
MGB	MASTER GROUND BAR

GROUNDING LEGEND:

SYMBOL	DESCRIPTION
●	EXOTHERMIC WELD
—o—o—o—	GROUND WIRE
■	MECHANICAL CONNECTION

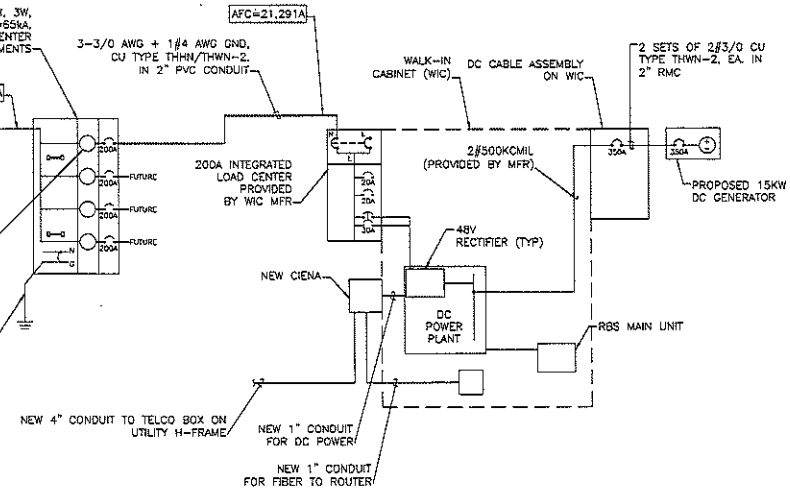

2 ONE-LINE DIAGRAM

SCALE: N.T.S.

DC GENERATOR OPERATION:

THE STANDBY DC GENSET CONNECTS DIRECTLY TO THE DC BUS THROUGH DISCONNECT DEVICES. THE GENERATOR CONTROLLER MONITORS THE DC BUS VOLTAGE – THE RECTIFIERS FLOATING THE SITE BATTERY PACK AT VOLTAGE AROUND 54VDC.

UPON THE LOSS OF UTILITY GRID, THE BATTERY VOLTAGE WILL START DECREASING DUE TO SITE LOADS. WHEN THE BATTERY VOLTAGE REACHES 50VDC, THE CONTROLLER STARTS THE ADJUSTABLE DELAY (60 SEC) TO CONFIRM UTILITY POWER LOSS.

AFTER THE ELAPSED DELAY AND 30 SEC WARMUP TIME THE 15KW DC GENERATOR DELIVERS FULL RATED POWER (270AMPS), UNTIL THE BATTERY VOLTAGE REACHES 51.5V, AT THIS POINT THE CONTROLLER SWITCHES TO CONSTANT VOLTAGE MODE, KEEPING THE BATTERY VOLTAGE AT 51.5VDC AND REDUCING THE CHARGING CURRENT TO CARRY THE SITE LOAD, THE GENSET WILL OPERATE AT THIS MODE UNTIL UTILITY GRID COMES BACK.

WHEN POWER IS RESTORED THE BATTERY VOLTAGE WILL INCREASE BACK TO 54V DUE TO THE RECTIFIERS COMING ONLINE. THIS ALSO FORCES THE DC GENERATOR OUTPUT CURRENT TO DROP AS THE RECTIFIERS CARRY THE LOAD. THE RECTIFIERS AUTOMATICALLY CARRY THE LOAD BECAUSE THEY ARE SET AT A HIGHER VOLTAGE.

THE DC GENSET WILL AUTOMATICALLY STOP WHEN THE GENERATOR MEETS ALL THREE BELOW CONDITIONS:

1. STOP VOLTAGE: THE BATTERY VOLTAGE IS HIGHER THAN 51.5 VDC (FIELD ADJUSTABLE)
2. LOW CURRENT DEMAND: CURRENT DROPS TO 15 AMPS (FIELD ADJUSTABLE)
3. TIME OUT: ELAPSED TIME 60SEC (FIELD ADJUSTABLE) – THIS DELAY IS TO CONFIRM UTILITY POWER IS FULLY RESTORED.

PREPARED FOR:

at&t

AT&T MOBILITY
1801 VALLEY VIEW LANE
FARMERS BRANCH, TX 75234

TILLMAN INFRASTRUCTURE

SITE NAME:
ATC GS ICE HOUSE RELO
SITE NUMBER:
HX0713 (HX0549)

SITE ADDRESS:
6911 HWY 225
DEER PARK, TX 77536
HARRIS COUNTY

STATE OF TEXAS
DAVID J. HILDEBRANDT
106713
LICENSED
PROFESSIONAL ENGINEER
11/6/18

LEVEL 5 CONSULTING ENGINEERS, INC.
19315 FM 2252, STE. 301
GARDEN RIDGE, TX 78266
PH: (210) 542-5911
F-13646

DRAWN BY:	IL
APPROVED BY:	TH
DATE DRAWN:	04/23/18

REVISION

NO	DESCRIPTION	BY	DATE
0	ISSUED FOR CONSTRUCTION	IL	04/23/18
1	NEW RFDS	IL	03/14/18
2	NEW RFDS	WS	11/07/18

SHEET TITLE:
GROUNDING SCHEMATIC AND ONE-LINE DIAGRAM

SHEET NUMBER:
E2.0

GENERAL NOTES

1. REFER TO N SHEETS FOR SITE COORDINATION REQUIREMENTS.
2. COORDINATE WITH CONSTRUCTION MANAGER TO OBTAIN CURRENT APPLICABLE TOWER GROUNDING REQUIREMENTS FROM AT&T WIRELESS.
3. USE TINNED COPPER (SOLID) FOR EXTERIOR GROUNDING (TYPICALLY #2 OR AS NOTED); USE STRANDED COPPER WIRE FOR GROUNDING WHERE NOT EXPOSED AND NOT IN CONTACT WITH EARTH (SEE NOTE 4 BELOW)
4. BURY ALL BARE GROUND WIRES MIN. 30" BELOW GRADE OR 6" BELOW FROST LINE WHICHEVER IS GREATER. LOCATE NO CLOSER THAN 2' FROM FENCE OR 24" FROM FOUNDATIONS. SLEEVE ALL FOUNDATIONS. CADWELD AND TEST CONDUCTIVITY OF ALL GROUND TIE POINTS.
5. TO MINIMIZE LIGHTNING DAMAGE, NO SHARP BENDS PERMITTED IN ANY WIRING, INCLUDING GROUNDING.
6. GROUND RODS TO BE COPPER CLAD STEEL 5/8" DIAMETER X 8'-0" LONG SPACED MIN. OF 10' APART WITH 16' PREFERRED.
7. PRIME AND EPOXY PAINT ALL EXPOSED CONDUIT TO MATCH EXTERIOR OF EQUIPMENT BUILDING.
8. ELECTRICAL CONTRACTOR SHALL CONNECT EXTERIOR GROUNDING WIRE TO GROUND RING INSIDE EQUIPMENT SHELTER. TOWER CONTRACTOR SHALL MAKE ALL ABOVE GROUND CONNECTIONS TO TOWER BUSS BARS AND WAVEGUIDE BRIDGES AT THE TIME OF CONNECTION TO THE TOWER. ONE CONNECTION TO THE TOWER BASE SHALL BE A MECHANICAL TYPE. ALL OTHERS SHALL BE CAD WELDED, SEE NOTE 10 BELOW.
9. CIVIL CONSTRUCTION CONTRACTOR SHALL BURY ALL GROUND RINGS AND CADWELD PIGTALS FOR ALL ABOVE GROUND CONNECTIONS AT THE TIME OF GROUND RING INSTALLATION. PROTECT AND SUPPORT ALL WIRING SUCH THAT IT WILL NOT VIBRATE/RUB AGAINST OTHER METALLIC OBJECTS AND SUCH THAT THERE ARE NO SHARP BENDS (NOMINAL RADIUS 8" MIN.)
10. CADEWELD ALL CONNECTIONS WHERE POSSIBLE AT TOWER OR LOCATION OF MULTIPLE CADWELD CONNECTIONS, IT MAY BE PERMISSIBLE TO MECHANICALLY BOLT A BUSS BAR TO GROUND OR TO SUPPORT STRUCTURE.
11. THE RESISTANCE BETWEEN ANY POINT ON THE GROUND SYSTEM AND REFERENCE GROUND SHOULD BE 5 OHMS OR LESS. NOTIFY CONSTRUCTION MANAGER IMMEDIATELY IF THIS IS NOT POSSIBLE DUE TO SOLID CONDITIONS FOR ALTERNATIVES.
12. GRIND OFF GALVANIZING IN AFFECTED AREA. EXOTHERMICALLY WELD #2 CONDUCTOR AT 6 INCHES ABOVE GRADE OR FOUNDATION, WHICHEVER IS HIGHER. COLD-GALV AFTER. EXOTHERMICALLY WELD OTHER END TO GROUND.
13. GROUND CONDUCTORS ON EXTERIOR WALL OF SHELTER SHALL BE ENCASED IN 3/4" PVC CONDUIT TO GRADE. MOUNT PVC WITH GALVANIZED "C" CLAMPS. SEAL TOP ENDS.
14. FOLLOWING COMPLETION OF WORK, CONDUCT GROUND TEST. SUBMIT WRITTEN TEST TO CONSTRUCTION MANAGER AND PROJECT MANAGER.
15. ALL GROUNDING SHALL BE IN ACCORDANCE WITH AT&T'S GROUNDING AND BONDING STANDARDS FOR CELL SITES. ALL TESTING SHALL BE CONDUCTED PER AT&T STANDARDS AND COMPLY WITH ALL STATE AND LOCAL CODES, AND THE NATIONAL ELECTRICAL CODE (NEC).
16. UNLESS NOTED OTHERWISE, ALL GROUNDING CONNECTIONS SHALL BE MADE BY AN EXOTHERMIC WELD.
17. NOTIFY THE CONSTRUCTION MANAGER 24 HOURS IN ADVANCE WHEN THE BURIED GROUND RING IS INSTALLED SO THAT A REPRESENTATIVE CAN INSPECT THE GROUND RING BEFORE IT IS BACKFILLED WITH SOIL.

GROUNDING LEGEND:

SYMBOL	DESCRIPTION
●	EXOTHERMIC WELD
—G—G—G—	GROUND WIRE
■	MECHANICAL CONNECTION
⊗	GROUND ROD
⊗	GROUND ROD WITH INSPECTION SLEEVE
○	INSPECTION SLEEVE

GROUNDING KEYED NOTES:

1. PROVIDE A #2 AWG TINNED COPPER GROUND RING IN ACCORDANCE WITH NATIONAL AND LOCAL CODES AND AT&T STANDARDS. ENSURE WIC GROUND RING, HALO GROUND, AND ICE BRIDGE ARE BONDED TO TOWERS GROUND RING WITH TWO LEADS, EXOTHERMIC WELDS, AND APPROPRIATE INSPECTION WELLS.
2. SEE SHEET E3.0 FOR FENCE AND GATE GROUNDING DETAILS

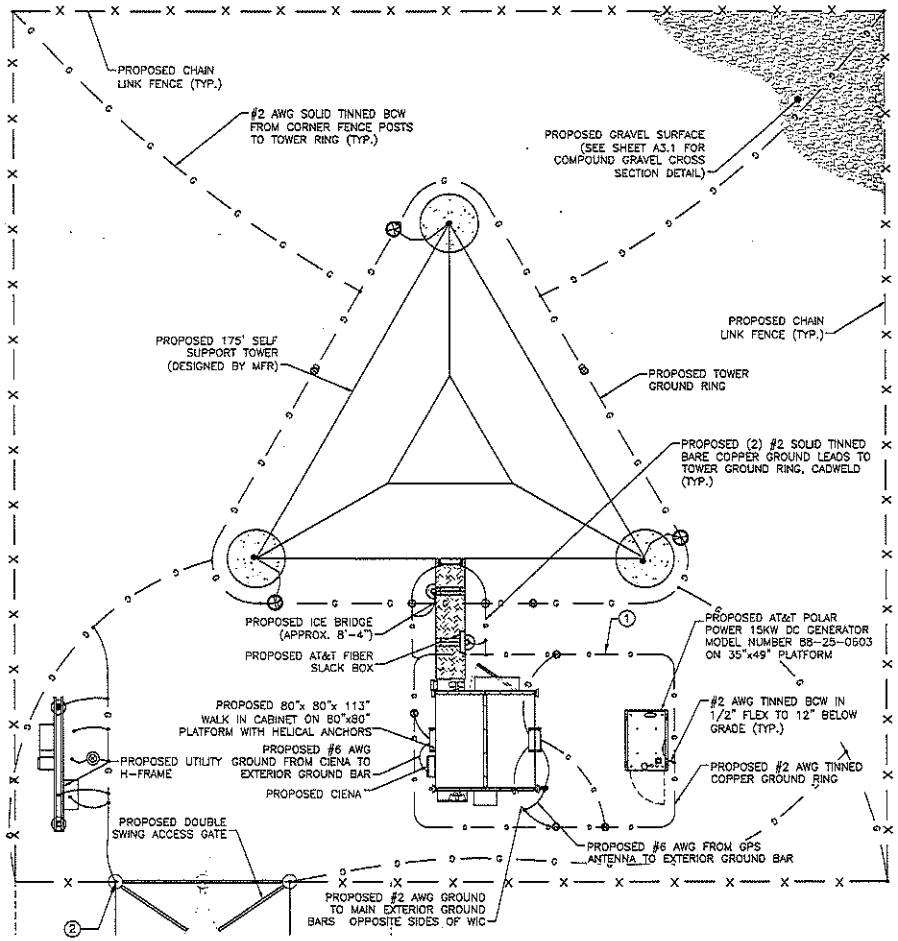

TRUE NORTH

1 COMPOUND GROUNDING PLAN

FULL SIZE PLOT SCALE: 1/4" = 1'-0"
HALF SIZE PLOT SCALE: 1/8" = 1'-0"

0 2' 4' 8'

PREPARED FOR:

at&t

AT&T MOBILITY
1801 VALLEY VIEW LANE
FARMERS BRANCH, TX 75234

TILLMAN INFRASTRUCTURE

SITE NAME:
ATC GS ICE HOUSE RELO

SITE NUMBER:
HX0713 (HX0549)

SITE ADDRESS:
6911 HWY 225
DEER PARK, TX 77536
HARRIS COUNTY

STATE OF TEXAS
DAVID J. HILDEBRANDT
106713
LICENSED
PROFESSIONAL ENGINEER
11/6/18

LEVEL 5 CONSULTING ENGINEERS, INC.
19315 FM 2252, STE. 301
GARDEN RIDGE, TX 78266
PH: (210) 542-5911
F-13646

DRAWN BY:	IL
APPROVED BY:	TH
DATE DRAWN:	04/23/18

REVISION

NO	DESCRIPTION	BY	DATE
0	ISSUED FOR CONSTRUCTION	IL	04/23/18
1	NEW RFDS	IL	03/14/18
2	NEW RFDS	WS	11/07/18

SHEET TITLE:
COMPOUND GROUNDING PLAN

SHEET NUMBER:
E2.1

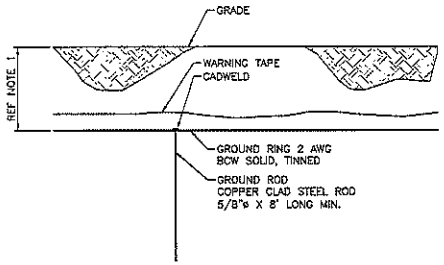

NOTE:

1. DEPTH SHALL BE MIN. 30" OR 6" BELOW THE FROST LINE, WHICHEVER IS GREATER
2. GROUND ROD SHALL BE DRIVEN VERTICALLY, NOT TO EXCEED 45 DEGREES FROM THE VERTICAL

1 TYPICAL GROUND ROD DETAIL
SCALE: N.T.S.

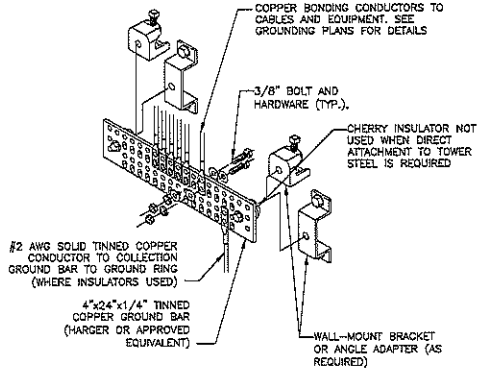

2 GROUND BAR DETAIL
SCALE: N.T.S.

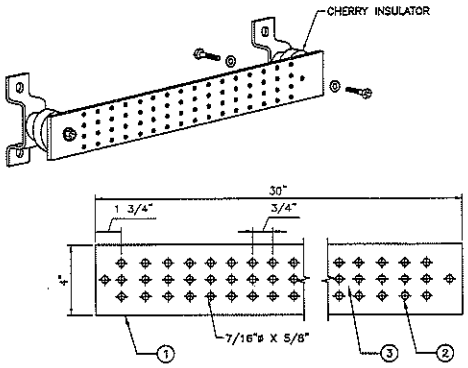

NOTES:

1 TINNED COPPER GROUND BUSS BAR, 1/4"x4"x30", WITH NON-INSULATED MOUNTING KIT OR EQUIVALENT.
2 GROUND BAR SHALL BE SIZED TO ACCOMMODATE ALL GROUNDING CONNECTIONS REQUIRED PLUS PROVIDE 50% SPARE CAPACITY
3 APPLY CONDUCTIVE LUBRICANT (NO-OX COMPOUND OR APPROVED EQUIVALENT) TO EXPOSED AREA OF GROUND BAR.

3 TYPICAL EXTERIOR MAIN GROUND BAR DETAIL
SCALE: N.T.S.

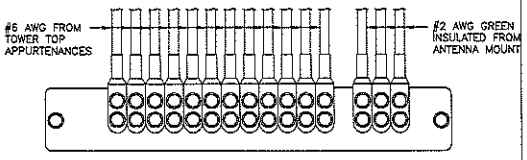

NOTE:

CONTRACTOR TO UTILIZE ANTI-OXIDATION COMPOUND (THOMAS & BETTS) ON ALL LUG CONNECTIONS.

4 TYPICAL UPPER GROUND BAR DETAIL
SCALE: N.T.S.

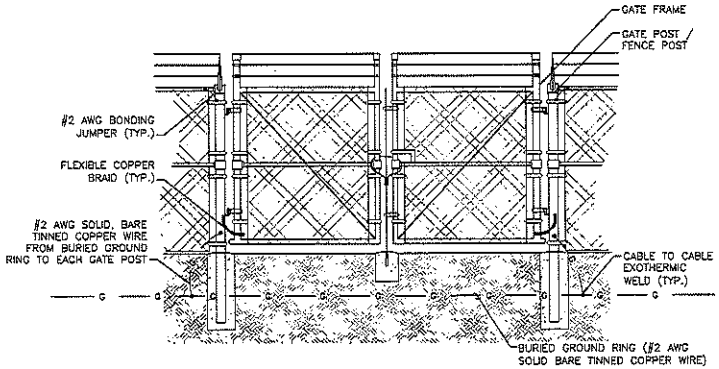

METAL FENCES WITHIN 7 FEET OF THE EXTERIOR RING GROUND SYSTEM OR OBJECTS BONDED TO THE EXTERIOR RING GROUND SYSTEM SHALL BE BONDED.

A. IF THE FENCE RUNS CONTINUOUSLY WITHIN 7 FEET OF THE EXTERIOR RING GROUND CONDUCTOR, IT SHALL BE BONDED AT AN INTERVAL NOT EXCEEDING 25 FEET. BONDS SHALL BE MADE ACROSS GATE OPENINGS.
B. THE #2 AWG SOLID, BARE, TINNED COPPER WIRE FROM THE BURIED GROUND RING SHALL BE CONNECTED TO EACH GATE POST AND CORNER POST USING AN EXOTHERMIC WELD OR CLAMP CONNECTOR LISTED FOR THE PURPOSE.
C. EACH GATE SECTION SHALL BE BONDED TO HINGE POST WITH A #2 AWG EQUIVALENT FLEXIBLE COPPER BRAID USING EXOTHERMIC WELDS OR CLAMP CONNECTORS LISTED FOR THE PURPOSE.
D. EACH HORIZONTAL POLE OR BRACE SHALL BE BONDED TO EACH OTHER AND TO THE VERTICAL POLE WHICH IS BONDED TO THE BURIED ROUND RING USING AN EXOTHERMIC WELDS OR CLAMP CONNECTORS LISTED FOR THE PURPOSE.

5 FENCE AND GATE GROUNDING DETAIL
SCALE: N.T.S.

PREPARED FOR:

at&t

AT&T MOBILITY
1801 VALLEY VIEW LANE
FARMERS BRANCH, TX 75234

TILLMAN INFRASTRUCTURE

SITE NAME:
ATC GS ICE HOUSE RELO
SITE NUMBER:
HX0713 (HX0549)

SITE ADDRESS:
6911 HWY 225
DEER PARK, TX 77536
HARRIS COUNTY

STATE OF TEXAS
DAVID J. HILDEBRANDT
106713
LICENSED
PROFESSIONAL ENGINEER
11/6/18

LEVEL 5 CONSULTING ENGINEERS, INC.
19315 FM 2252, STE. 301 PH: (210) 542-5911
GARDEN RIDGE, TX 78266 F-13646

DRAWN BY:	IL
APPROVED BY:	TH
DATE DRAWN:	04/23/18

REVISION

NO	DESCRIPTION	BY	DATE
0	ISSUED FOR CONSTRUCTION	IL	04/23/18
1	NEW RFDS	IL	03/14/18
2	NEW RFDS	WS	11/07/18

SHEET TITLE:
GROUNDING DETAILS

SHEET NUMBER:
E3.0

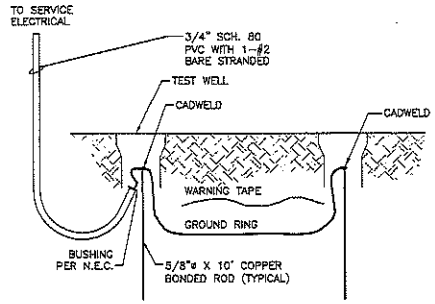

1 TYPICAL GROUNDING ELECTRODE DETAIL
SCALE: N.T.S.

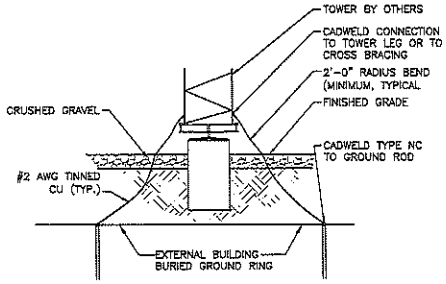

2 TYPICAL TOWER GROUNDING DETAIL
SCALE: N.T.S.

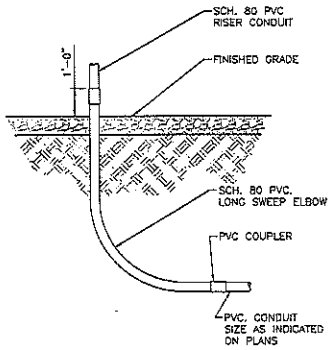

3 TYPICAL CONDUIT TRANSITION DETAIL
SCALE: N.T.S.

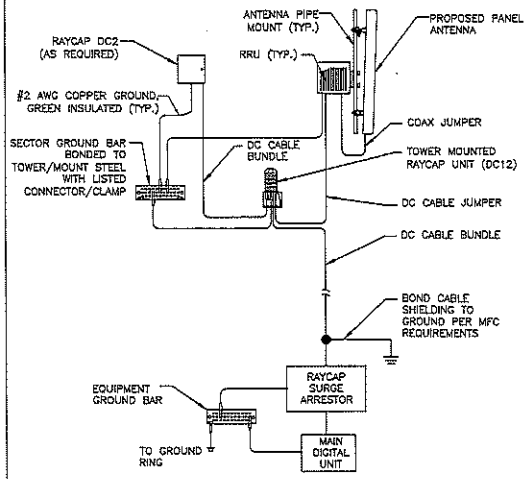

4 GROUNDING SCHEMATIC - TOWER TOP RRU
SCALE: N.T.S.

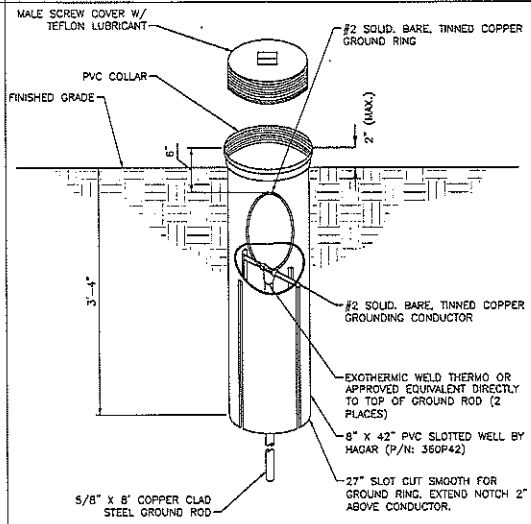

5 TYPICAL INSPECTION WELL DETAIL
SCALE: N.T.S.

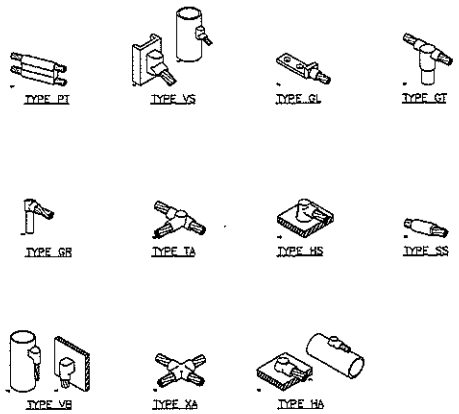

6 TYPICAL CADWELD CONNECTIONS
SCALE: N.T.S.

PREPARED FOR:

at&t

AT&T MOBILITY
1801 VALLEY VIEW LANE
FARMERS BRANCH, TX 75234

TILLMAN INFRASTRUCTURE

SITE NAME:
ATC GS ICE HOUSE RELO
SITE NUMBER:
HX0713 (HX0549)
SITE ADDRESS:
8911 HWY 225
DEER PARK, TX 77536
HARRIS COUNTY

STATE OF TEXAS
DAVID J. HILDEBRANDT
106713
LICENSED
PROFESSIONAL ENGINEER
11/6/18

LEVEL 5 CONSULTING ENGINEERS, INC.
19315 FM 2252, STE. 301
GARDEN RIDGE, TX 78266
PH: (210) 542-5911
F-13646

DRAWN BY:	IL
APPROVED BY:	TH
DATE DRAWN:	04/23/18

REVISION

NO	DESCRIPTION	BY	DATE
0	ISSUED FOR CONSTRUCTION	IL	04/23/18
1	NEW RFDS	IL	03/14/18
2	NEW RFDS	WS	11/07/18

SHEET TITLE:
GROUNDING DETAILS

SHEET NUMBER:
E3.1

DIVISION 16 ELECTRICAL SPECIFICATIONS

16000 SCOPE OF WORK:

1. THE REQUIREMENTS PRESENTED IN THESE SPECIFICATIONS PERTAIN TO ELECTRICAL INSTALLATION OF A COMPLETELY NEW POWER RACEWAY SYSTEM FOR THE AT&T WIRELESS INSTALLATION TO THE EXTENT REQUIRED BY THESE CONTRACT DOCUMENT. IN GENERAL, THE ELECTRICAL CONTRACTOR (HEREAFTER ALTERNATELY REFERRED TO AS 'CONTRACTOR') SHALL PROVIDE OR RESTORE THE FOLLOWING EXISTING SYSTEMS:
   A. CONDUIT AND RACEWAYS FOR ALL DEVICES, EQUIPMENT, GROUND BUSSES AND GROUND RODS INDICATED ON THE ELECTRICAL PLANS.
   B. CONTRACTOR SHALL RUN FEEDERS SHOWN TO SUPPLY POWER TO ALL EQUIPMENT INDICATED PRIOR TO BID. CONTRACTOR SHALL DETERMINE ANY ADDITIONAL POWER OR GROUNDING WHICH MAY BE REQUIRED DEPENDING ON EQUIPMENT SPECIFIC TO THIS SITE AND BUILDING ENCLOSURE.
2. CONTRACTOR(S) WISHING TO BID THIS WORK SHALL BE ABLE TO DEMONSTRATE A MINIMUM OF 5 YEARS PREVIOUS EXPERIENCED WITH THIS TYPE OF PROJECT AND SHALL, IF REQUESTED, SUPPLY DOCUMENTATION TO SUPPORT THIS REQUIREMENT OF QUALIFICATION.
3. EACH QUALIFIED BIDDER SHALL OBTAIN ALL PROPER BID FORMS AND SHALL VISIT THE SITE TO DETERMINE ACTUAL EXISTING CONDITIONS PRIOR TO PREPARING BID.
4. CONTRACTOR SHALL NOTE THAT IF THIS SITE CURRENTLY HOSTS ONE OR MORE OTHER TENANTS WITH TELEPHONE AND/OR ELECTRICAL SERVICE, CONTRACTOR SHALL NOT CAUSE LOSS OF POWER, COMMUNICATION OR ANY REQUIRED SERVICES TO AT&T WIRELESS OR ANY OTHER SITE OCCUPANT IN ANY MANNER WITHOUT EXPRESS WRITTEN DIRECTION BY AT&T WIRELESS CONSTRUCTION SUPERVISION. THE CONTRACTOR SHALL BE LIABLE FOR ANY LOSS OF REVENUE TO ANY SITE OCCUPANT BECAUSE OF ANY NONSCHEDULED OUTAGES AS DETERMINED BY CONTRACT AGREEMENT WITH AT&T WIRELESS.

16001 GENERAL:

1. IT IS THE INTENTION OF THESE SPECIFICATIONS AND THE RELATED PLANS TO SHOW COMPLETE, PROPERLY FUNCTIONING SYSTEMS. ALL SYSTEMS, WIRING AND RACEWAYS SHALL BE INSTALLED PER NFPA-70 (APPLICABLE) AND AUTHORITY HAVING JURISDICTION.

16002 SPECIAL CONDITIONS FOR ELECTRICAL WORK:

1. THE CONSTRUCTION DOCUMENTS INCLUDING BUT NOT LIMITED TO THESE PLANS, SPECIFICATIONS, AND CONTRACTS ARE ISSUED FOR INFORMATION TO BE COMPLIED BY THE ELECTRICAL CONTRACTOR AND ANY OR ALL SUBCONTRACTORS AND TRADES EMPLOYED ON THIS PROJECT BY THE ELECTRICAL CONTRACTOR, HEREAFTER REFERRED TO AS CONTRACTOR.
2. THE TERM "CONTRACTOR" IN THIS SECTION REFERS TO THE CONTRACTOR WHOSE WORK IS COVERED BY THIS ELECTRICAL SPECIFICATION.
3. ALL WORK SHALL BE DONE AND TESTED IN ACCORDANCE WITH THESE PLANS AND SPECIFICATIONS AND WITH LOCAL AND NATIONAL CODES. REPORT SUPPOSED CONFLICTS WITH PLANS AND SPECIFICATIONS IMMEDIATELY TO THE CONSTRUCTION SUPERINTENDENT WHO WILL ISSUE INSTRUCTIONS OR ADDENDA TO RESOLVE SUCH CONFLICTS. IN NO CASE SHALL A CONTRACTOR BASE ITS BID ON WORK THAT WILL NOT BE ACCEPTABLE TO CODE AND THESE CONTRACT DOCUMENTS. NO CONSIDERATION SHALL BE GIVEN TO REQUESTS FOR EXTRA COMPENSATION TO BRING THE BASE WORK INTO CONFORMANCE WITH THESE DOCUMENTS.
4. ALL MATERIAL FOR WHICH THERE IS A CATEGORY FOR TESTING BY UL OR CSA SHALL BE SO TESTED, LISTED AND LABELED.
5. AS MENTIONED ABOVE, IT IS THE INTENT OF THESE DOCUMENTS TO PRODUCE A COMPLETE AND FINISHED ELECTRICAL SYSTEM TO THE EXTENT SHOWN IN THESE CONTRACT DOCUMENTS. THE AT&T WIRELESS CONSTRUCTION MANAGER SHALL BE THE FINAL AUTHORITY FOR ACCEPTANCE OF THE WORK. THE CONTRACTOR IS SOLELY RESPONSIBLE FOR COORDINATING HIS WORK WITH OTHER TRADES AND WITH HIS SUBCONTRACTORS AS NECESSARY TO PROVIDE A FINAL AND COMPLETE ELECTRICAL INSTALLATION.
6. THE CONTRACTOR SHALL EMPLOY ONLY SKILLED, EXPERIENCED, AND WHEN REQUIRED, LICENSED SUB CONTRACTORS AND WORKERS. MATERIALS AND EQUIPMENT SHALL BE INSTALLED IN ACCORDANCE WITH THE MANUFACTURER'S WRITTEN INSTRUCTIONS, IN ACCORDANCE WITH THE BEST TRADE PRACTICES AND IN A NEAT AND WORKMAN LIKE MANNER. WORK WHICH IN THE OPINION OF THE CONSTRUCTION MANAGER DOES NOT CONFORM TO THE INTENT OF THESE PLANS AND SPECIFICATIONS SHALL BE REMOVED AND REPLACED AT THE CONTRACTOR'S EXPENSE.
7. THE PLANS AND DETAILS ARE DIAGRAMMATIC IN NATURE. COORDINATE THE LOCATION OF ITEMS NOT CLEARLY DIMENSIONED WITH THE CONSTRUCTION SUPERINTENDENT.
8. SECURE ALL NECESSARY PERMITS, LICENSES AND INSPECTIONS AND PAY ALL REQUIRED FEES, TESTS AND WAGE SCALES THAT MAY BE REQUIRED. THE CONTRACTOR SHALL INCLUDE THE FINAL INSPECTION CERTIFICATE IN FINAL DOCUMENTS.
9. THE CONTRACTOR IS RESPONSIBLE FOR UNDERSTANDING THE EXISTING SITE CONDITIONS. HE SHALL VISIT THIS SITE (BY APPOINTMENT) AT ANY REASONABLE TIME.
10. LOCATIONS OF UTILITY CONNECTIONS SHOWN ON THE SITE ARE APPROXIMATE AND ARE BASED ON SITE OBSERVATIONS. ACTUAL UTILITY CONNECTIONS AND EXACT LOCATIONS MAY VARY SLIGHTLY. THE CONTRACTOR SHALL CONTACT THE UTILITY COMPANIES INVOLVED PRIOR TO BID TO CONFIRM THE ACTUAL CONDITIONS OF CONNECTION. THE CONTRACTOR SHALL INCLUDE IN HIS BID THE ACTUAL CONDITIONS OF CONNECTION AND ANY FEES REQUIRED BY THE UTILITY FOR PROPOSED NEW 200 AMP, 240/120 VAC SINGLE PHASE UTILITY SERVICE THE CONTRACTOR SHALL COORDINATE WITH THE ELECTRICAL COMPANY CONCERNING ITEMS WHICH HE MUST PROVIDE AND THE CONSTRUCTIONS SCHEDULE.
11. AFTER COMPLETION OF THE WORK AND BEFORE FINAL INSPECTION, THE CONTRACTOR SHALL THOROUGHLY CLEAN EACH EXPOSED DEVICE, PIECE OFEQUIPMENT AND FIXTURE TO THE SATISFACTION OF THE CONSTRUCTION SUPERINTENDENT.
12. THE CONTRACTOR SHALL SUBMIT ALL MATERIALS LISTED BELOW TO THE ENGINEER FOR APPROVAL PRIOR TO INSTALLATION. FAILURE TO OBTAIN APPROVAL ON MATERIAL SHALL BE CAUSE FOR CONTRACTOR TO REMOVE ANY MATERIALS NOT APPROVED AND REPLACE THEM AT HIS OWN EXPENSE AND WITH NO ALLOWANCE IN THE TIME ALLOWED FOR CONSTRUCTION.
    SUBMITTALS: PROVIDE IN QUANTITY REQUESTED BY THE CONSTRUCTION MANAGER, THE FOLLOWING MINIMUM ITEMS SHALL BE SUBMITTED AT THE SAME TIME UNDER ONE COVER IN THE ORDER LISTED:
    TAB ONE: WIRE, CONDUIT, GROUND RODS, GROUND BUSSES, ELECTRICAL (CAD) WELD DEVICES, METALLIC SHEATHED FLEXIBLE CONDUIT, OUTLET AND PULL BOXES.
    TAB TWO: SWITCHES, ENCLOSURES, CABINETS, TIMERS, AND RECEPTACLES.
    TAB THREE: PANEL BOARDS, DISCONNECT SWITCHES (DESIGNATE USE OF EACH), FUSES, AND CIRCUIT BREAKERS OR OTHER CONTROL DEVICES.
13. THE CONTRACTOR SHALL GUARANTEE THAT ALL WORK PERFORMED UNDER THIS CONTRACT IS FREE FROM DEFECTS IN MATERIAL AND WORKMANSHIP FOR ONE YEAR (MINIMUM) FOLLOWING FINAL ACCEPTANCE BY THE OWNER'S REPRESENTATIVE. THE CONTRACTOR SHALL RESPOND TO REQUESTS FOR SERVICE IN A TIMELY MANNER APPROPRIATE TO THE SERVICE REQUESTED, THE CONTRACTOR SHALL IMMEDIATELY REPAIR OR REPLACE ANY ITEMS FOUND TO BE DEFECTIVE WITHIN THE GUARANTEE PERIOD AT NO COST TO THE OWNER.
14. THE CONTRACTOR SHALL MAINTAIN ON THE SITE A SET OF CONSTRUCTION DOCUMENTS MARKED IN RED TO SHOW THE ACTUAL CONDITIONS OF CONSTRUCTION. LOCATIONS OF EQUIPMENT AND ROUTING OF SYSTEMS SHALL BE ACCURATELY RECORDED DURING THE COURSE OF CONSTRUCTION. CONTRACTOR SHALL FORWARD A REPRODUCIBLE COPY OF THE RECORD DRAWINGS TO AT&T WIRELESS AT THE COMPLETION OF CONSTRUCTION AND SHALL MAINTAIN THE ORIGINAL RECORD DRAWINGS FOR USE DURING THE GUARANTEE PERIOD. FINAL PAY REQUEST SHALL NOT BE APPROVED WITHOUT THIS FINALIZED INFORMATION IN ACCORDANCE WITH AT&T WIRELESS CLOSE OUT INSTRUCTIONS.
15. IN ADDITION TO THE ABOVE REQUIRED RECORD DRAWINGS, THE CONTRACTOR SHALL FURNISH TO AT&T WIRELESS AT THE COMPLETION OF THE WORK THE FOLLOWING DOCUMENTS: TEST REPORTS, WARRANTIES, OPERATIONS AND MAINTENANCE MANUALS AND INFORMATION.
    A. CERTIFICATE OF GUARANTEE/WARRANTY SHOWING THE DATES OF BEGINNING AND ENDING OF THE WARRANTY.
    B. DOCUMENTS PERTINENT TO THE GUARANTEES AND WARRANTIES OF MANUFACTURERS.
    C. WRITTEN INSTALLATION INSTRUCTIONS FOR EQUIPMENT INSTALLED ON THE PROJECT.
    D. THREE SETS OF CUT SHEETS FOR EACH PIECE OF EQUIPMENT INSTALLED FOR ELECTRICAL SYSTEMS.
    E. CERTIFIED RESISTANCE MEASUREMENT DATA AND DRAWINGS USED DURING CONSTRUCTION.
16. ALL MATERIALS SHALL BE NEW AND OF DOMESTIC, OR IF APPROVED, NAFTA MANUFACTURE. ALL ITEMS OF THE SAME TYPE ON THE PROJECT SHALL BE OF THE SAME MANUFACTURER.
17. PRODUCTS OF VARIOUS MATERIALS AND EQUIPMENT ARE SPECIFIED IN ORDER TO ESTABLISH A STANDARD OF QUALITY AND A BASIS OF DESIGN. OTHER SIMILAR MATERIALS MAY BE ACCEPTABLE AS SUBSTITUTIONS PROVIDED THEY MEET THE SAME STANDARDS OF QUALITY AND DESIGN CRITERIA IN THE OPINION OF THE ENGINEER. ALTERNATE ITEMS SHALL BE SUBMITTED TO THE ENGINEER FOR APPROVAL PRIOR TO INSTALLATION. THE DECISION OF THEENGINEER REGARDING ACCEPTABILITY SHALL BE FINAL. THE CONTRACTOR SHALL BEAR ALL COSTS, INCLUDING THAT OF OTHER TRADES AND THE DESIGN TEAM, ASSOCIATED WITH ACCOMMODATIONS FOR PERMITTED SUBSTITUTIONS.

16123 WIRE AND CABLE:

1. ALL WIRE AND CABLE SHALL BE COPPER OF AT LEAST 98% CONDUCTIVITY.
2. ALL INSULATION SHALL BE TYPE "THWN" EXCEPT TYPE "THW" MAY BE USED FOR SIZES LARGER THAN #6 AWG.
3. NO WIRE SMALLER THAN #12 AWG MAY BE USED EXCEPT THAT CONTROL CIRCUIT MAY BE #14.
4. A STRICT METHOD OF COLOR CODING SHALL BE MAINTAINED. UNLESS THE AUTHORITY HAVING JURISDICTION HAS A DIFFERENT STANDARD, THE FOLLOWING SHALL BE MAINTAINED: A PHASE: BLACK; B PHASE: RED; (AND WHERE USED,) C PHASE: BLUE; NEUTRAL: WHITE; GROUND: GREEN; SWITCH LEG: BROWN; TRAVELERS: BROWN.
5. WIRE CONNECTORS FOR #8 AND SMALLER MAY BE SPRING STEEL CONNECTORS. SPLIT BOLT CONNECTORS WITH RUBBER AND VINYL TAPE SHALL BE USED FOR SIZES LARGER THAN #8. POWER DISTRIBUTION BLOCKS MAY BE USED FOR ANY SIZE CONDUCTOR FOR WHICH IT IS LISTED.
6. UL LISTED WIRE PULLING LUBRICANT SHALL BE USED ON ALL RACEWAY INSTALLATIONS.

16130 RACEWAY SYSTEMS:

1. ALL WIRING ABOVE GRADE OR OTHERWISE EXPOSED SHALL BE IN METALLIC CONDUIT. TYPE MC CABLE OR FLEXIBLE CONDUIT MAY NOT BE USED UNLESS SHOWN OR REQUIRED BY THESE SPECIFICATIONS EMT, GALVANIZED INTERMEDIATE AND RIGID CONDUIT ARE ALL ACCEPTABLE WIRING MATERIALS FOR ABOVE GRADE PROVIDED THEY ARE ACCEPTABLE TO LOCAL CODE ENFORCEMENT.
2. ALL FITTINGS SHALL BE COMPRESSION TYPE OR SCREW TYPE AND MAY NOT BE DIE CAST SET SCREW.
3. CONDUIT BELOW GRADE SHALL BE SCHEDULE 40 PVC WITH MATCHING FITTINGS EXCEPT THAT ELBOWS AND VERTICAL CONDUITS IN CONTACT WITH EARTH WHICH ARE LIKELY TO BE DAMAGED BY EXCESSIVE PULLING ROPE TENSION MAY BE PLASTIC WRAPPED INTERMEDIATE OR RIGID GALVANIZED STEEL.
4. EXPOSED CONDUIT OUTDOORS ABOVE GRADE OR IN DAMP LOCATIONS SHALL BE GALVANIZED RIGID STEEL OR INTERMEDIATE METALLIC CONDUIT.
5. ULTRAVIOLET PROTECTED PLASTIC COATED FLEXIBLE METAL CONDUIT MAY BE USED WHERE INDICATED AND OTHERWISE FOR THE CONNECTION OF ROTATING OR VIBRATING EQUIPMENT. SUCH EQUIPMENT LOCATED OUTDOORS OR IN DAMP LOCATIONS SHALL BE CONNECTED WITH LIQUID TIGHT FLEXIBLE METAL CONDUIT USING LISTED FITTINGS.
6. MINIMUM COVER FOR OUTDOOR CONDUITS SHALL BE 36 INCHES.
   NOTE: UTILITY CONDUITS MAY HAVE A GREATER DEPTH REQUIREMENT.

16250 GROUNDING:

1. ALL EQUIPMENT AND SERVICE ENTRANCE GROUNDING SHALL BE PER NFPA-70 CURRENT EDITION AS ADOPTED BY LOCAL AUTHORITY HAVING JURISDICTION ON THIS PROJECT. PER ARTICLE 250 AS WELL AS OTHER APPLICABLE STANDARDS SUCH AS THE NATIONAL ELECTRICAL SAFETY CODE, NFPA 780 (LIGHTNING PROTECTION) AND AT&T WIRELESS STANDARDS ON EQUIPMENT GROUNDING.

16400 WIRING DEVICES:

1. ALL WIRING DEVICES SHALL BE SPECIFIED GRADE RATED AT 20 AMPS.
2. PROVIDE DEVICES AS SHOWN ON DOCUMENTS. CONSULT WITH CONSTRUCTION MANAGER AND OTHER TRADES FOR EXACT LOCATION OF OUTLETS. WHERE OUTLETS SERVE A SPECIFIC PIECE OF EQUIPMENT AND WHERE POSSIBLE, CONCEAL OUTLET BEHIND THAT EQUIPMENT.

16500 PANEL BOARDS: PROVIDED BY AT&T WIRELESS OR CONTRACTOR (VERIFY BEFORE BIDDING) AND INSTALLED BY THIS CONTRACTOR

1. VERIFY THAT THE INTERRUPTING RATING OF CIRCUIT BREAKERS SHALL BE GREATER THAN THE AVAILABLE FAULT CURRENT. VERIFY THE AVAILABLE FAULT CURRENT WITH THE SERVING ELECTRICAL UTILITY.
2. PROVIDE SOLID NEUTRALS ON ALL PANELS AND MAIN SERVICE ENTRANCE DISCONNECT (IF MAIN SERVICE DISCONNECT REQUIRED).
3. PROVIDE 1" BLACK MICARTA TAGS WITH 1/2" WHITE LETTERS FOR EACH PANEL BOARD AND DISCONNECT MATCHING PROJECT DOCUMENTATION. TAGS SHALL BE "POP-RIVETTED" THROUGH PANEL COVER.

16600 LIGHTING FIXTURES (IF SHOWN):

1. PROVIDE LIGHTING FIXTURES AS SHOWN ON THE DOCUMENTS. QUESTIONS ON LIGHT FIXTURE TYPES SHALL BE DIRECTED TO AT&T WIRELESS FOR CLARIFICATION. THE CONTRACTOR SHALL PROVIDE ALL LIGHTING FIXTURES.
2. FASTEN EACH LIGHTING FIXTURE TO AN OUTLET BOX OR STRUCTURAL FRAMING. INCLUDE ALL NECESSARY HARDWARE AND SUPPORTING DEVICES TO ACCOMPLISH THIS.
3. PROVIDE NEW LAMPS OF THE TYPE RECOMMENDED BY THE PLANS AND SPECIFICATION AT THE TIME OF FINAL ACCEPTANCE.
4. ALL LIGHTING FIXTURES SHALL BE CLEAN AND FULLY OPERATIONAL AT THE TIME OF FINAL ACCEPTANCE.

16700 EQUIPMENT CONNECTIONS:

1. PROVIDE ELECTRICAL POWER AND LIGHTING CONNECTIONS FOR ALL EQUIPMENT ON THE PROJECT WHETHER FURNISHED BY THIS CONTRACTOR OR OTHERS.
2. CAREFULLY RESEARCH THE DOCUMENTS AND CONSULT WITH OTHERS TO DETERMINE THE REQUIREMENTS FOR CONNECTIONS.

16900 SPECIAL MODULAR CELL INSTALLATION GROUNDING INTEGRITY AND IMPEDANCE TESTING:

1. CONTRACTOR SHALL PRESENT MEASUREMENTS SHOWING CERTIFIED THIRD PARTY GROUND IMPEDANCE TESTING AS REQUIRED BY THE CONTRACT DOCUMENTATION. TESTING PER ANSI/IEEE STD 81-1983, IEEE GUIDE FOR MEASURING EARTH RESISTIVELY SHALL BE AS APPROVED BY AT&T WIRELESS CONSTRUCTION MANAGEMENT.
2. THIS INSTALLATION SHALL BE GROUNDED WITH AN INTEGRATED (MULTI-POINT) GROUNDING SYSTEM.
3. SURGE PROTECTION SHALL BE AT&T WIRELESS APPROVED EQUIPMENT. IT SHALL BE BONDED TO A GROUND BAR AT THE SERVICE ENTRANCE POINT THAT IS CONNECTED DIRECTLY TO THE GROUNDING ELECTRODE SYSTEM.
4. REVIEW EXISTING INSTALLATION AND FOLLOW AT&T WIRELESS CELL SITE GROUNDING AND LIGHTNING PROTECTION STANDARDS REPORT PERCEIVED DIFFICULTIES WITH MEETING THIS CRITERIA WITH AT&T WIRELESS CONSTRUCTION MANAGEMENT. OTHER REQUIRED STANDARDS SHALL BE: NFPA-780 STANDARD FOR INSTALLATION OF LIGHTNING SYSTEMS AND POLYPHASER EQUIPMENT; AND, "THE GROUNDS FOR LIGHTNING PROTECTION AND EMP PROTECTION", SECOND EDITION BY ROGER R. BLOCK.
5. THE ELECTRICAL CONTRACTOR SHALL PROVIDE BONDING STRAPS, CAD WELDING AND HARDWARE FOR EACH SEPARATE PIECE OF THE EQUIPMENT MOUNTING PLATFORM TO ASSURE THAT ALL PIECES ARE ELECTRICALLY CONNECTED. SUCH CONNECTIONS SHALL BE MADE AND TESTED TO DEMONSTRATE LOW ELECTRICAL RESISTANCE ACCEPTABLE TO AT&T WIRELESS BETWEEN ANY TWO POINTS ON THE PLATFORM, MOUNTS OR STRUCTURE.

PREPARED FOR:

at&t

AT&T MOBILITY
1801 VALLEY VIEW LANE
FARMERS BRANCH, TX 75234

TILLMAN INFRASTRUCTURE

SITE NAME:
ATC GS ICE HOUSE RELO
SITE NUMBER:
HX0713 (HX0549)
SITE ADDRESS:
6911 HWY 225
DEER PARK, TX 77536
HARRIS COUNTY

STATE OF TEXAS
DAVID J. HILDEBRANDT
106713
LICENSED
PROFESSIONAL ENGINEER
11/6/18

LEVEL 5 CONSULTING ENGINEERS, INC.
19315 FM 2252, STE. 301
GARDEN RIDGE, TX 78266
PH: (210) 542-5911
F-13646

DRAWN BY:	IL
APPROVED BY:	TH
DATE DRAWN:	04/23/18

REVISION

NO	DESCRIPTION	BY	DATE
0	ISSUED FOR CONSTRUCTION	IL	04/23/18
1	NEW RFDS	IL	03/14/18
2	NEW RFDS	WS	11/07/18

SHEET TITLE:
ELECTRICAL SPECIFICATIONS

SHEET NUMBER:
E4.0